ORDER NO. EMID0207013C0
A5

Service Manual

PCM KEYBOARD

SX-KN7000P
SX-KN7000PC
SX-KN7000EX
SX-KN7000EF
SX-KN7000EH
SX-KN7000EQ
SX-KN7000EG
SX-KN7000EB
SX-KN7000EV
SX-KN7000GN
SX-KN7000GM
SX-KN7000GH
SX-KN7000GT
SX-KN7000GU

(P) U.S.A.
(PC) Canada
(EX) Norway, Sweden, Denmark, Finland, Spain, Portugal, Greece, Poland, Czech,South Africa
(EF) France
(EH) Netherlands
(EQ) Germany
(EG) Austria, Switzerland, Italy
(EB) Great Britain
(EV) Belgium
(GN) Australia, New Zealand
(GM) Malaysia, Singapore
(GH) Hong Kong

(GT) Taiwan

(GU) Thailand, Indonesia, Dubai, Brazil, Philippines, Barkley(special)

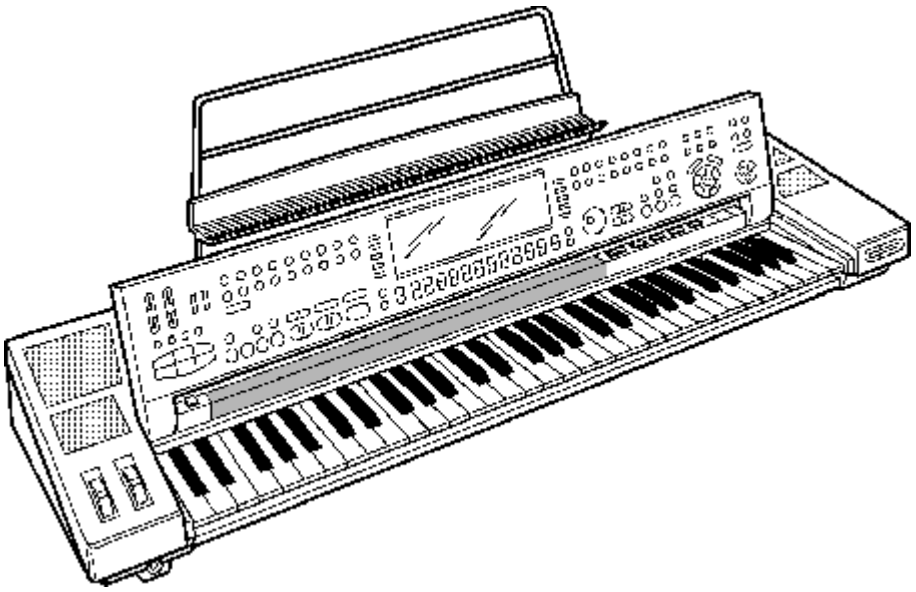

SPECIFICATIONS

SPECIFICATIONS

KEYBOARD	61 KEYS (WITH INITIAL TOUCH)
SOUND GENERATOR	PCM
MAX. POLYPHONY	128 NOTES

SOUNDS	**NUMBER OF SOUNDS: 1236 SOUNDS (1187 SOUNDS + 2 ORGAN DRAWBARS + 2 ORGAN TABS + 3 ACCORDION REGISTERS + 41 DRUM KITS)** **SOUND GROUP: PIANO, GUITAR, STRINGS & VOCAL,BRASS, MALLET & ORCH PERC, WORLD, ORGAN & ACCORDION,SAX & WOODWIND, PAD , SYNTH, BASS, DRUM KITS, DIGITAL DRAWBAR, ORGAN TABS, ACCORDION REGISTER** **SOUND EXPLORER: Supported**
EFFECT	**PART: SUSTAIN, DIGITAL EFFECT, SOUND DSP** **GLOBAL: REVERB, CHORUS, MULTI, MIC**
WHEEL	**PITCH BEND, MODULATION**
PART SELECT	**RIGHT 1, RIGHT 2, LEFT**
TRANSPOSE	**+/-12 NOTES**
RHYTHMS	**NUMBER OF RHYTHMS: 220 RHYTHMS × 4 VARIATIONS** **RHYTHM GROUP: 8 & 16 BEAT, ROCK & POP, BALLAD, JAZZ & SWING, MODERN DANCE, MARCH & WALTZ, 60s & 70s,SOUL & R&B, COUNTRY & WESTERN, ORGANIST, BALL ROOM, LATIN & WORLD, ENTERTAINER, MOVIE & SHOW,**
FAVORITES	**Supported**

CONTROLS	**MAIN VOLUME, APC/ SEQUENCER VOLUME, LINE IN VOLUME, SD VOLUME, BALANCE, MUTE, CONDUCTOR, START/STOP, INTRO & ENDING 1, INTRO & ENDING 2, FILL IN 1, FILL IN 2, COUNT INTRO, SYNCHRO& BREAK,TEMPO/ PROGRAM, TAP TEMPO, FADEIN/OUT, SPLIT POINT**
PERFORMANCE PADS	**20 PRESET BANKS × 6 PADS WITH SOLO USER BANK × 3, COMPILE BANKS × 2, CONTROL PRESET × 1 STOP, AUTO SETTING**
AUTO PLAY CHORD	**MODE: BASIC, FINGERED, PIANIST MEMORY, ON BASS, CHORD FINDER, LEFT HOLD**
MUSIC STYLE ARRANGER	**Supported**
SOUND ARRANGER	**Supported**
MUSIC STYLIST	**Supported**
ONE TOUCH PLAY	**Supported**
TECHNI-CHORD	**Supported**
PANEL MEMORY	**13 BANKS × 8, SET, NEXT BANK, BANK VIEW, CUSTOM PANEL**
SEQUENCER	**16 TRACKS RESOLUTION: 1/96 PER BEAT STORAGE CAPACITY: APPROX.40000 NOTES (10 SONG MAX.) INPUT MODES: EASY RECORD, REALTIME RECORD, STEP RECORD FUNCTIONS: RECORD& EDIT, COPY & PASTE,RANGE EDIT**

COMPOSER	**8 PARTS: BASS, ACCOMP 1 - 5, DRUMS 1, 2** **STORAGE CAPACITY: APPROX. 13000 NOTES** **INPUT MODES: EASY COMPOSER, REALTIME RECORD, STEP RECORD** **FUNCTIONS: PATTERN COPY, CUSTOM STYLE COPY, SEQ TO COMPOSERCOPY, LOAD SINGLE COMPOSER** **MEMORY: 3 BANKS**
DISK DRIVE	**3.5 inch DISK DRIVE for 2HD (1.44MB), 2DD (720KB)** **LOAD, SAVE, DIRECT PLAY, SONG MEDLEY, DISK TOOLS, PREFERENCES, STYLE CONVERT, CUSTOM STYLE LOAD/SAVE**
SD CARD	**LOAD, SAVE, FAVORITES SONGS, TECHNICS SONG MEDLEY, SD-AUDIO PLAY, SD-SOUND PLAY, CUSTOM STYLE LOAD/ SAVE, SD CARD TOOLS, SD PREFERENCES**
SOUND SETTING	**PART SETTING, MIXER, MASTER TUNING, KEY SCALING, TECHNI-CHORD, SOUND LOAD OPTION, APC REVERB SETTING, MONITOR SETTING, SEPARATE SETTING**
SOUND EDIT	**EASY EDIT, TONE, PITCH, FILTER, AMPLITUDE, LFO, EFFECT, CONTROLLER** **MEMORY: 40, 1 USER DRUM KIT**

REVERB & EFFECT	**MIC REVERB & EFFECT, SOUND LOAD OPTION, ALLOCATION, MIXER, SOUND DSP, MULTI, CHORUS, REVERB, EQUALIZER**
CONTROL	**INITIAL, OVERALL TOUCH SENSITIVITY, FOOT CONTROLLERS, PANEL MEMORY MODE, MUSIC STYLE ARRANGER MODE, FADE IN/OUT SETTING**
CUSTOMIZE	**HOME PAGE SETTING, FAVORITE SETTING, DISPLAY TIME OUT, WALL PAPER SETTING, MIDI SETTING LOAD OPTION, DATA PROTECTION, LANGUAGE SELECT, DISK PREFERENCE, VIDEO OUT MODE SETTING**
MIDI	**PART SETTING, CONTROL MESSAGES, REALTIME MESSAGES, COMMON SETTING, INPUT/OUTPUT SETTING, MIDI PRESETS, MODE SETTING, PROGRAM CHANGE MIDI OUT, PANEL MEMORY OUTPUT, COMPUTER CONNECTION**
DISPLAY	**LCD PAGE, CONTRAST, EXIT, DISPLAY HOLD**
HELP	**Supported**
DEMO	**Supported**

TERMINALS	**PHONES, FOOT SW 1, 2, FOOT CONTROLLER, EXP PEDAL, MAIN OUT (R /MONO,L), SUB OUT (1,2) AUX IN (R/MONO,L), LINE IN (R/MONO,L), USB, VIDEO OUT, MIDI (IN/ BASS PEDAL, OUT,THRU), MIC**
OUTPUT	**66 W (18 W × 2 FOR MID/ HIGH, 30 W × 1 FOR BASS)**
SPEAKERS	**12 cm × 2, 6.5 cm × 2 FOR MID/HIGH, 14 cm × 1 FOR BASS**
POWER REQUIREMENT	**75 W AC120/220/240V 50/60 Hz AC120V 60 Hz (NORTH AMERICA AND MEXICO) AC230-240V 50/60 Hz (EUROPE, AUSTRALIA AND NEW ZEALAND**
DIMENSIONS (W×H×D)	**114 cm × 17 cm × 41 cm (44-7/8” × 6-11/16” × 16-1/ 8”)**
NET WEIGHT	**17.6 kg (38.8 lbs)**
ACCESSORIES	**AC CORD, MUSIC STAND, STYLE CONVERT DISK, INITIAL DATA DISK, CD-ROM(AUDIO RECORDER, SONG MANAGER, USB DRIVER), SD CARD**

⚠ WARNING

This service information is designed for experienced repair technicians only and is not designed for use by the general public.
It does not contain warnings or cautions to advise non-technical individuals of potential dangers in attempting to service a product.
Products powered by electricity should be serviced or repaired only by experienced professional technicians. Any attempt to service or repair the product or products dealt with in this service information by anyone else could result in serious injury or death.

Technics

1. Warning

To prevent the risk of fire, smoke, or electrical shock and to ensure safe operation, please be sure to follow the safety guidelines below.

1. **At places where special caution is required, the necessary safety precautions are clearly labeled or printed, for example, on the cabinet, or on the part concerned. Please follow these safety precautions, and also those listed in the Owner'sManual.**
2. **Parts which have a ⚠ ; mark in the circuit diagram or in the parts list are essential for safety. When replacing these parts, be sure to use onlythe specified parts.**
3. **Use the specified types for internal wiring (double-insulated wiring, etc.).**
4. **When replacing parts on the AC primary side (power transformer, electric switch, electrical cord, noise-prevention condenser, etc.), wind the lead wire and secure it by soldering.**
5. **Do not let the wiring come into contact with heat-emitting devices (fuse resistor, radiator plate, etc.).**
6. **When replacing the wiring, make sure that it is not in contact with the unfinished or rough edge of a part.**
7. **When replacing the power cord (except for the plug-in type), tug it from various directions to confirm that it does not slip out of place.**
8. **Spacing**
   If soldering was done on the AC primary circuit, confirm that the interval between the soldered terminals or between the terminal and surrounding metallic parts is at least the minimum required (between the primary circuit and the chassis: atleast6.5 mm; between primary circuit terminals: at least 4.0 mm; between primary circuit terminals and secondary circuit terminals: at least 6.5 mm.).

2. Safety Precaution

2.1. Safety Precaution

1. **Before servicing, unplug the power cord to prevent an electric shock.**
2. **When replacing parts, use only the manufacturer’s recommended components for safety.**
3. **Check the condition of the power cord. Replace if wear or damage is evident.**
4. **After servicing, be sure to restore the lead dress, insulation barriers, insulation papers, shields, etc.**
5. **Before returning the serviced equipment to the customer, be sure to make the following insulation resistance test to prevent the customer from being exposed to a shock hazard.**

2.2. Insulation Resistance Test

1. Unplug the power cord and short the prongs of the plug with a jumper wire.

2. Turn on the power switch.

3. Measure the resistance value with an ohmmeter between the jumpered AC plug and each exposed metal cabinet part, such as screw heads, connectors, control shafts, handle brackets, etc. Measurements should range from 4 MOhm to infinity for allexposedparts. (refer to Fig.1)

Fig.1

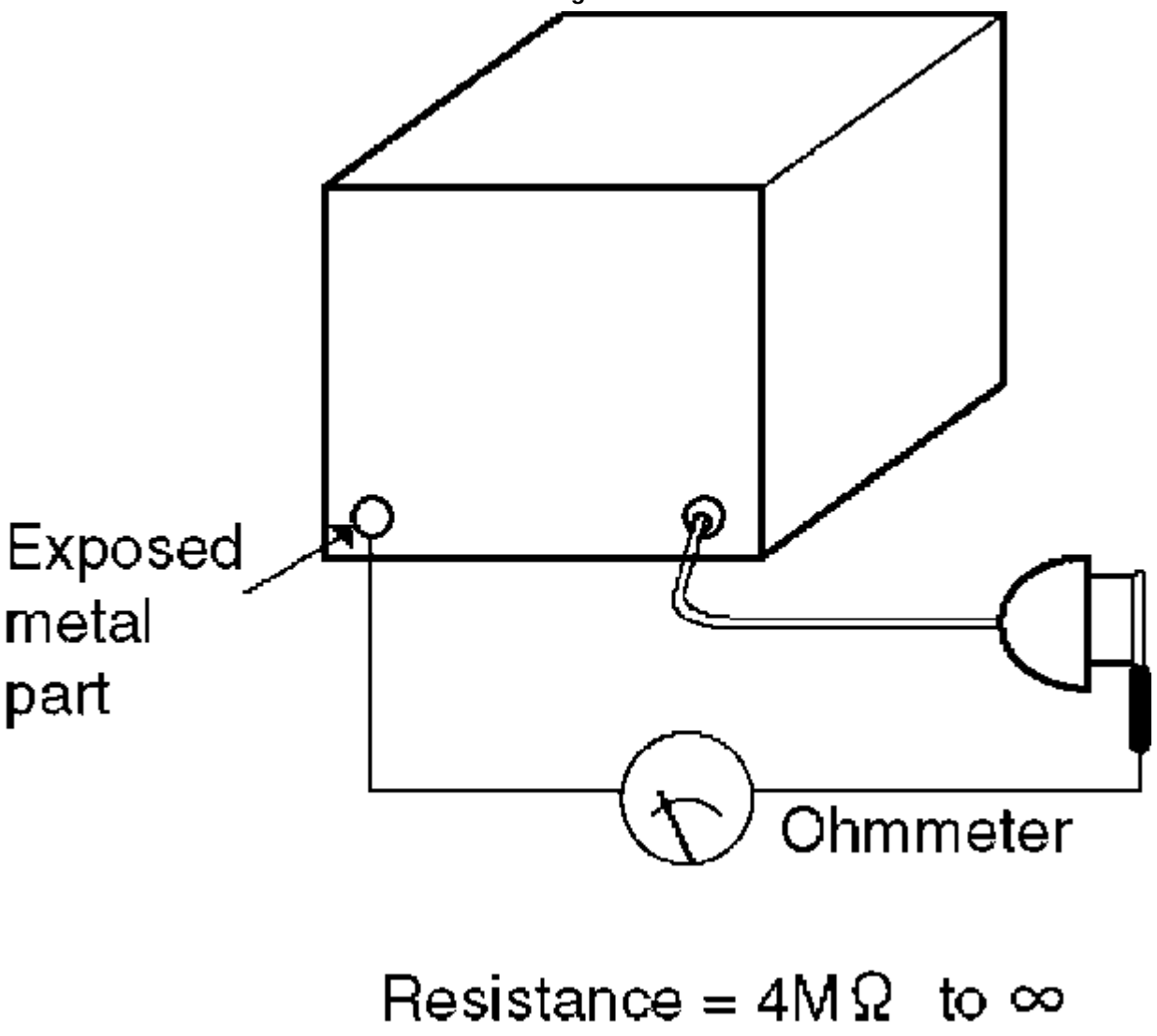

3. OWNERS MANUAL

4. MIDI Implementation Chart

5. Keyboard Ranges

This keyboard features Touch Response, by which you control the volume by playing the keys harder or softer.

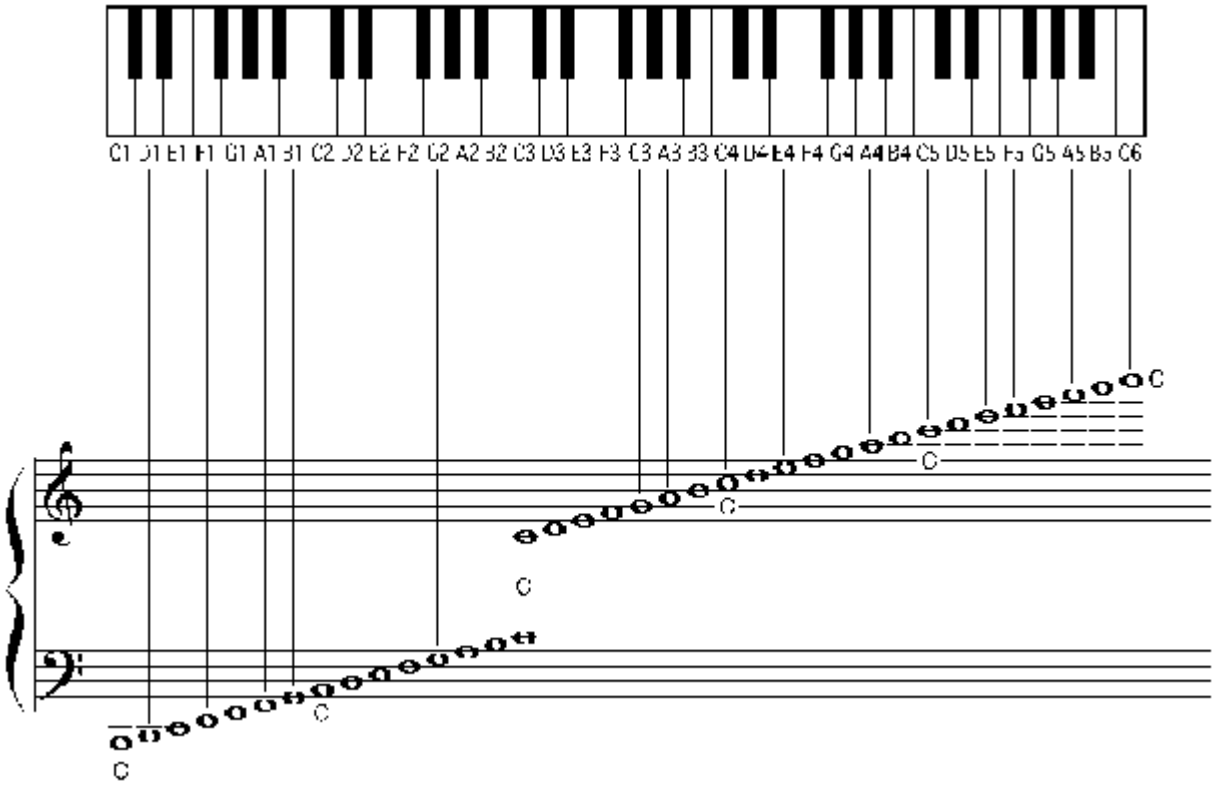

6. Parts Location

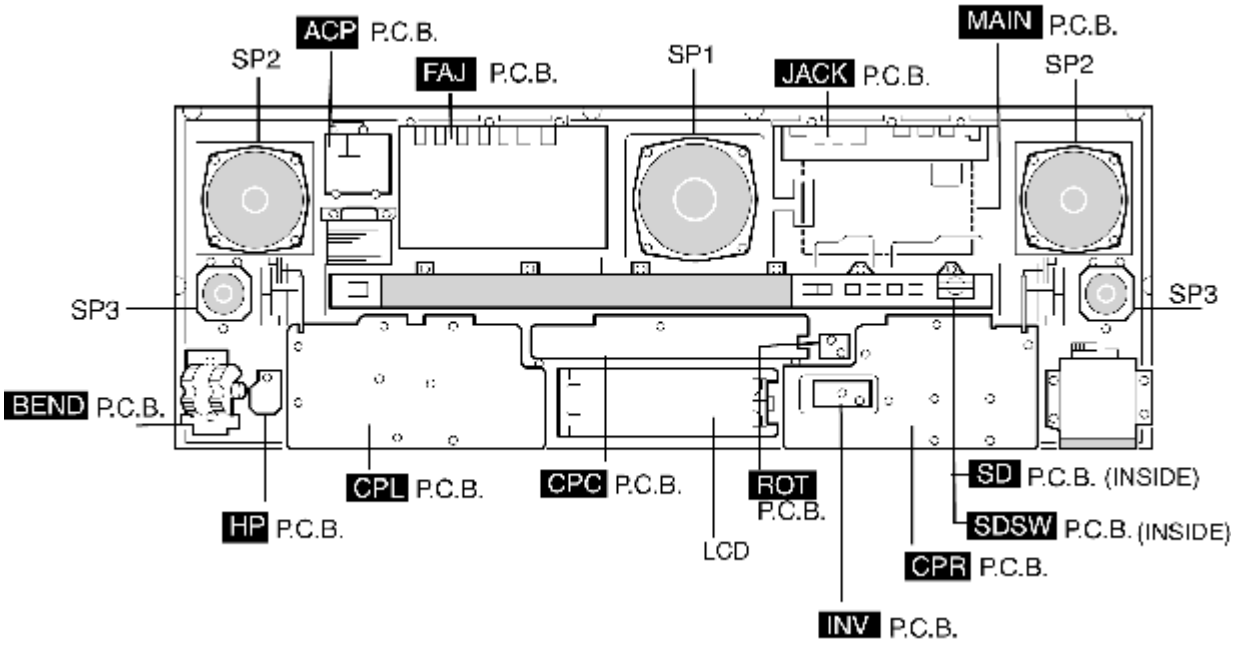

7. Disassembly Instructions

7.1. Removing the top cabinet

1. Turn the keyboard cabinet upside down, and remove the bottom screws (Ⓐ 17 pcs.) as shown in Fig.2 .

2. Place the keyboard bottomside down, and open the top cabinet .

Fig.2

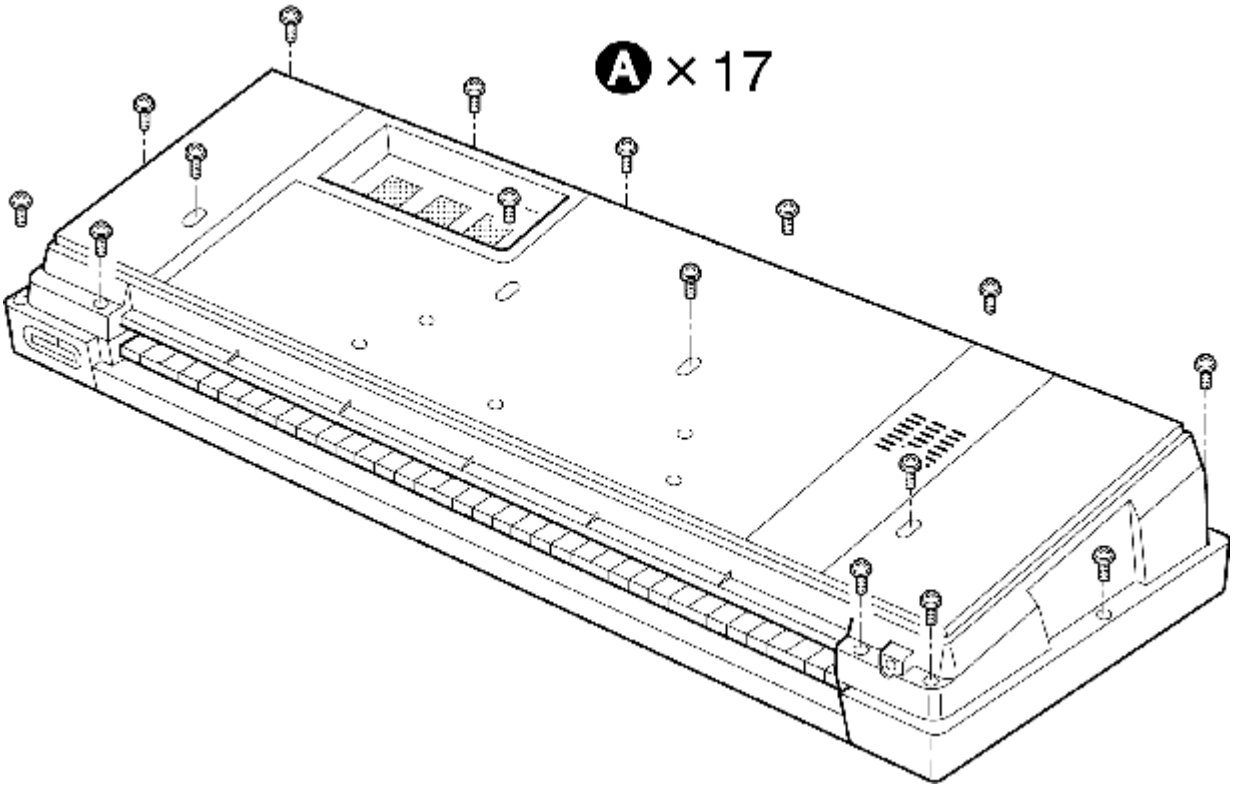

- **The control panel is set up, and remove the top cabinet as shown in Fig.3 .**

Fig.3

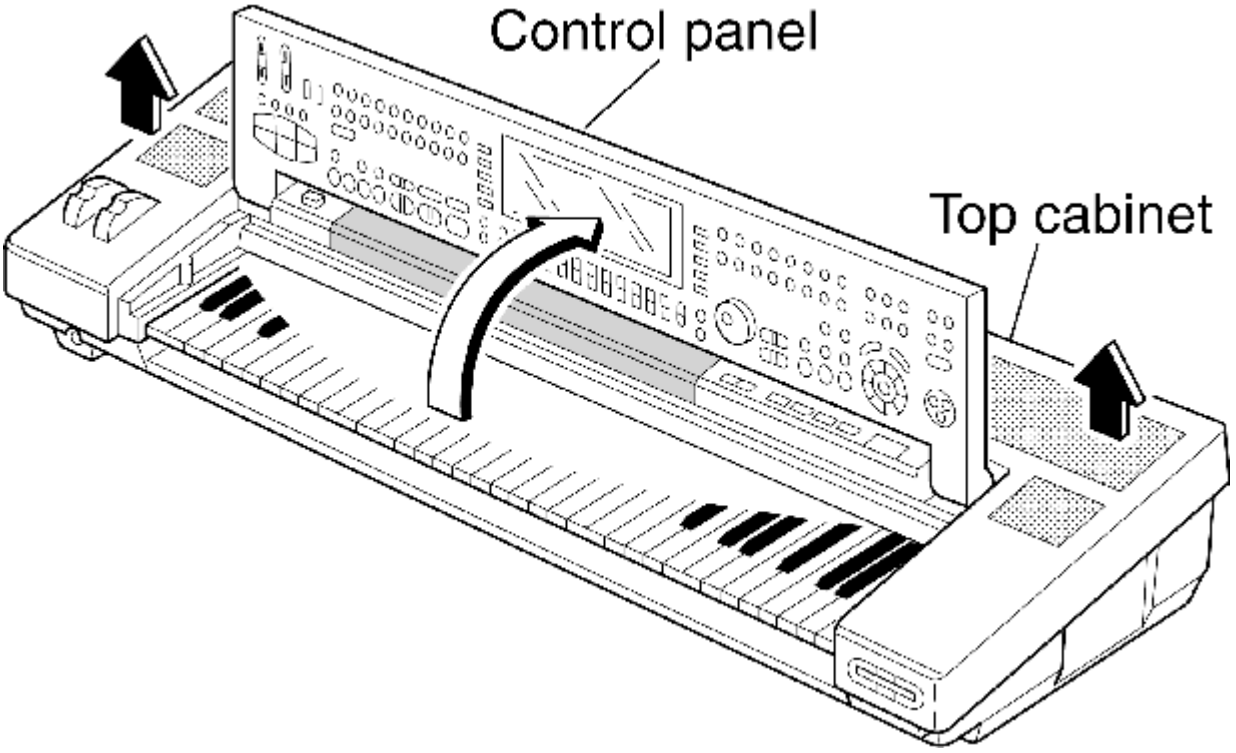

7.2. Removing the control panel, power SW panel, SD panel,

net panel and keyboard unit

- Remove the top cabinet (see step "Removing the top cabinet ").
- Remove the bottom screws(Ⓐ5pcs.) as shown in Fig.4

Fig.4

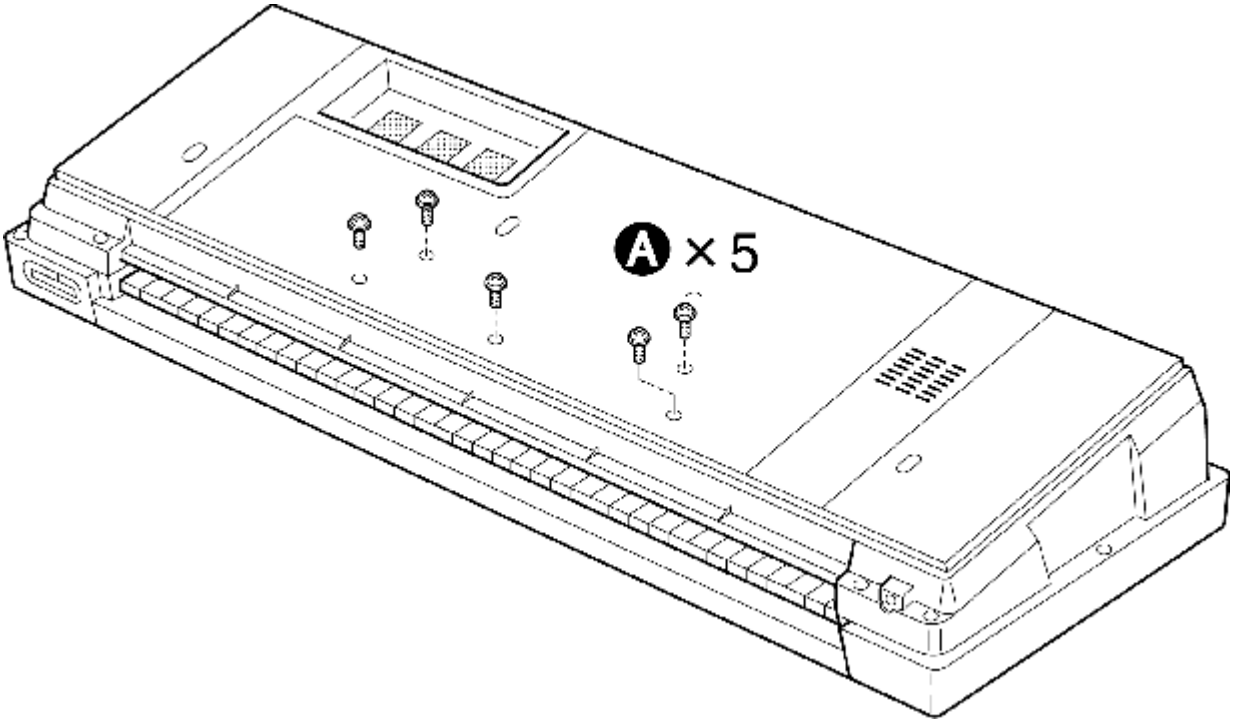

Control panel

1. Place the keyboard bottomside down.
2. Remove the control panel holding screws (Ⓑ 4pcs.) as shown in Fig.7 .

Power SW panel

- Remove the power SW panel holding screws (Ⓒ2pcs.) as shown in Fig.7 .

SD panel

- Remove the SD panel holding screws (Ⓓ2pcs.) as shown in Fig.7 .

Net panel

- Remove the net panel holding screws (Ⓔ4pcs.) as shown in Fig.7 .

Keyboard unit

- **Remove the keyboard unit holding screws (Ⓕ2pcs.) as shown in Fig.7 .**

Fig.5

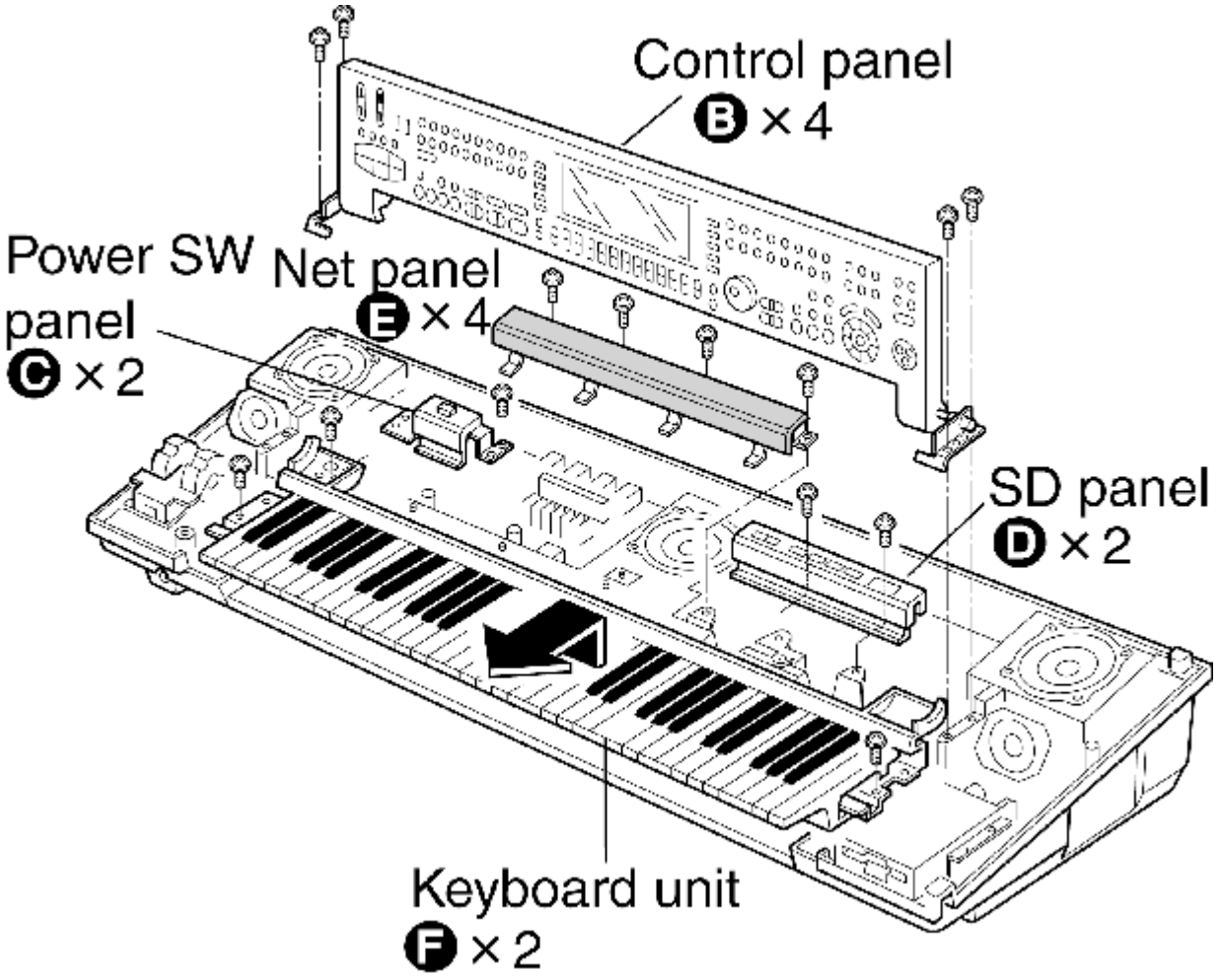

7.3. Removing the JACK and MAIN printed circuit boards

JACK P.C.B.

1. Remove the jack panel mounting screws (Ⓐ5pcs.) as shown in Fig.6 .

2. Remove the JACK P.C.B. mounting screws (Ⓑ3 pcs.,Ⓒ3pcs, Ⓓ3pcs.)as shown in Fig.6 .

Fig.6

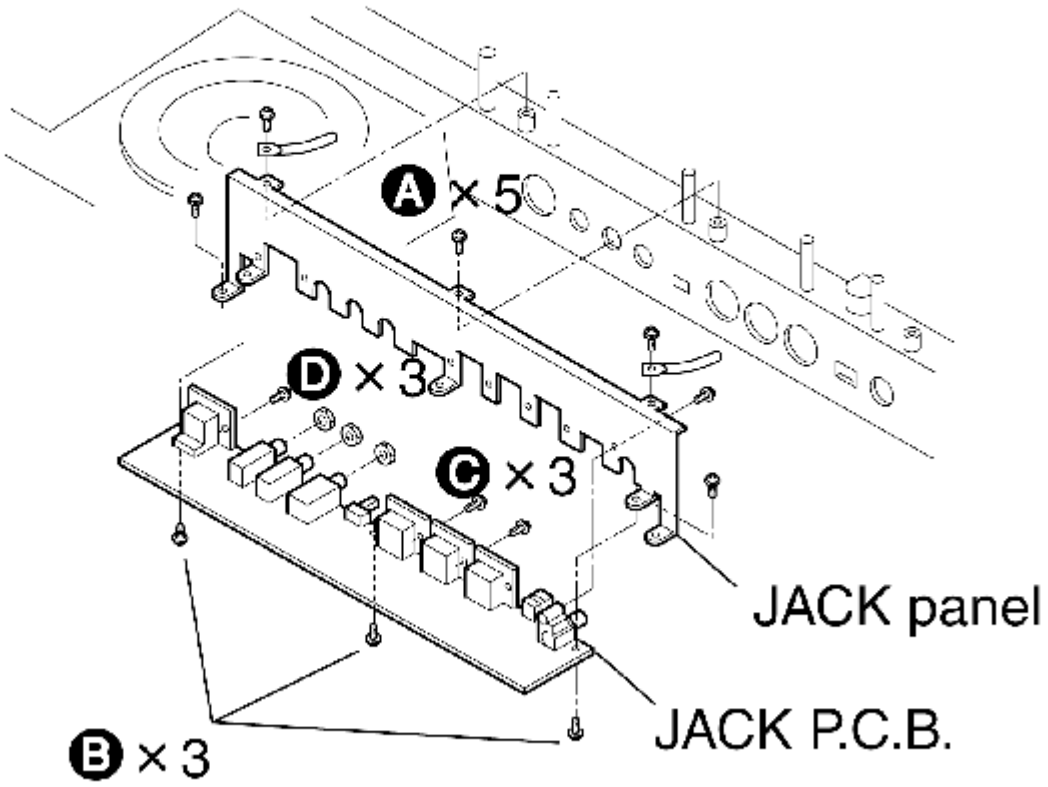

MAIN P.C.B.

1. Remove the main shild top case mounting screws (Ⓐ 6 pcs.) as shown in Fig.7 .

2. Remove the MAIN P.C.B. mounting screws (Ⓑ 10pcs.) as shown in Fig.7 .

Fig.7

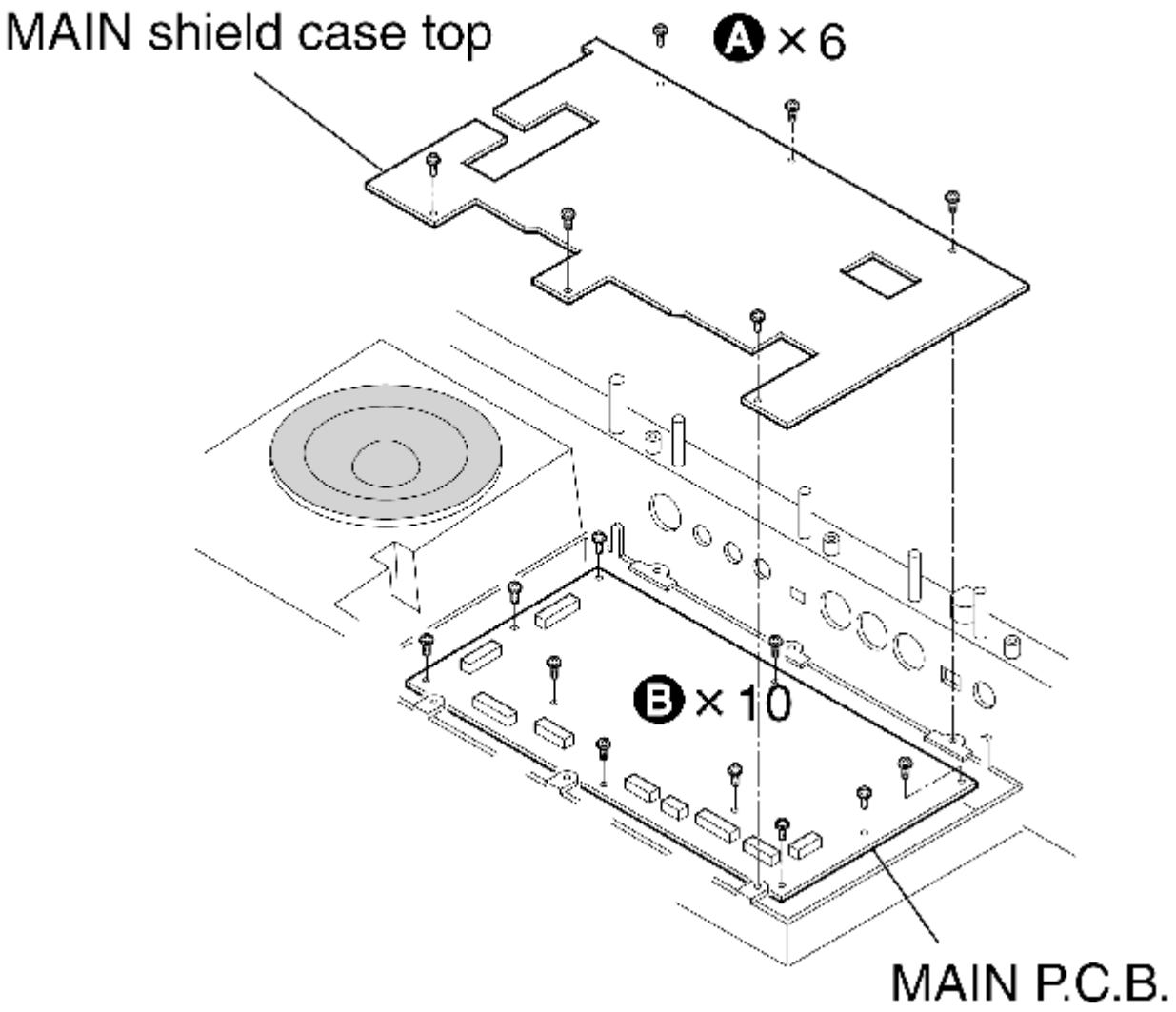

7.4. Removing the FAJ printed circuit board

FAJ P.C.B.

1. Remove the FAJ angle mounting screws (Ⓐ 3pcs.) as shown in Fig.8 .

2. Remove the FAJ P.C.B. mounting screws (Ⓑ 6pcs., Ⓒ 3pcs, Ⓓ 9pcs.)as shown in Fig.8 .

Fig.8

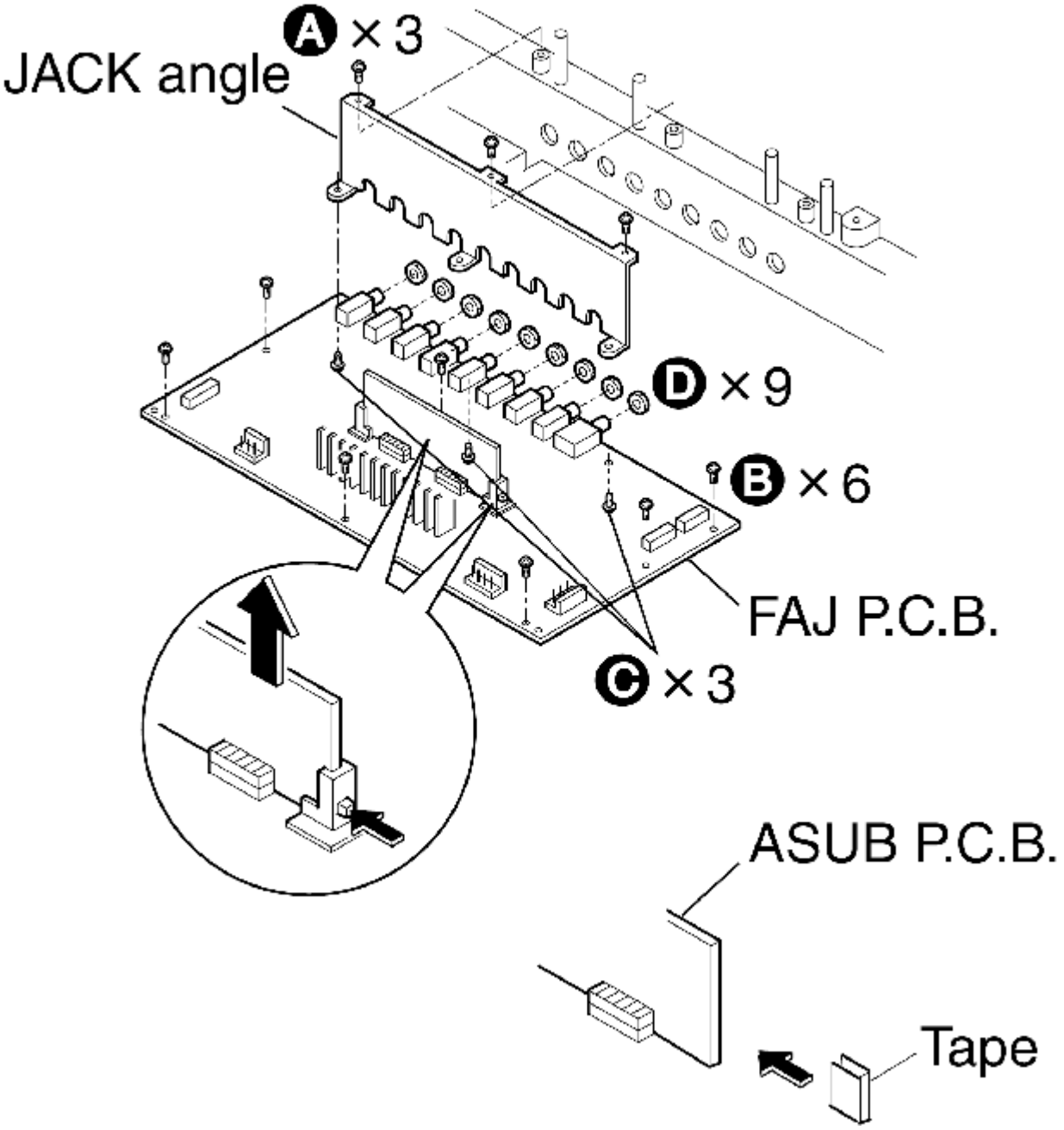

ASUB P.C.B. disasemble

- **Push the board holder libs as shown in Fig.8 .**

ASUB P.C.B. asemble

- **Paste the tape as shown in Fig.8**

7.5. Removing the ACP printed circuit board

ACP P.C.B.

1. Remove the ACP cover mounting screws (Ⓐ3pcs.) as shown in Fig.9 .

2. Remove the ACP P.C.B.and insuration sheet mounting screw (Ⓑpc.) as shown in Fig.9 .

Fig.9

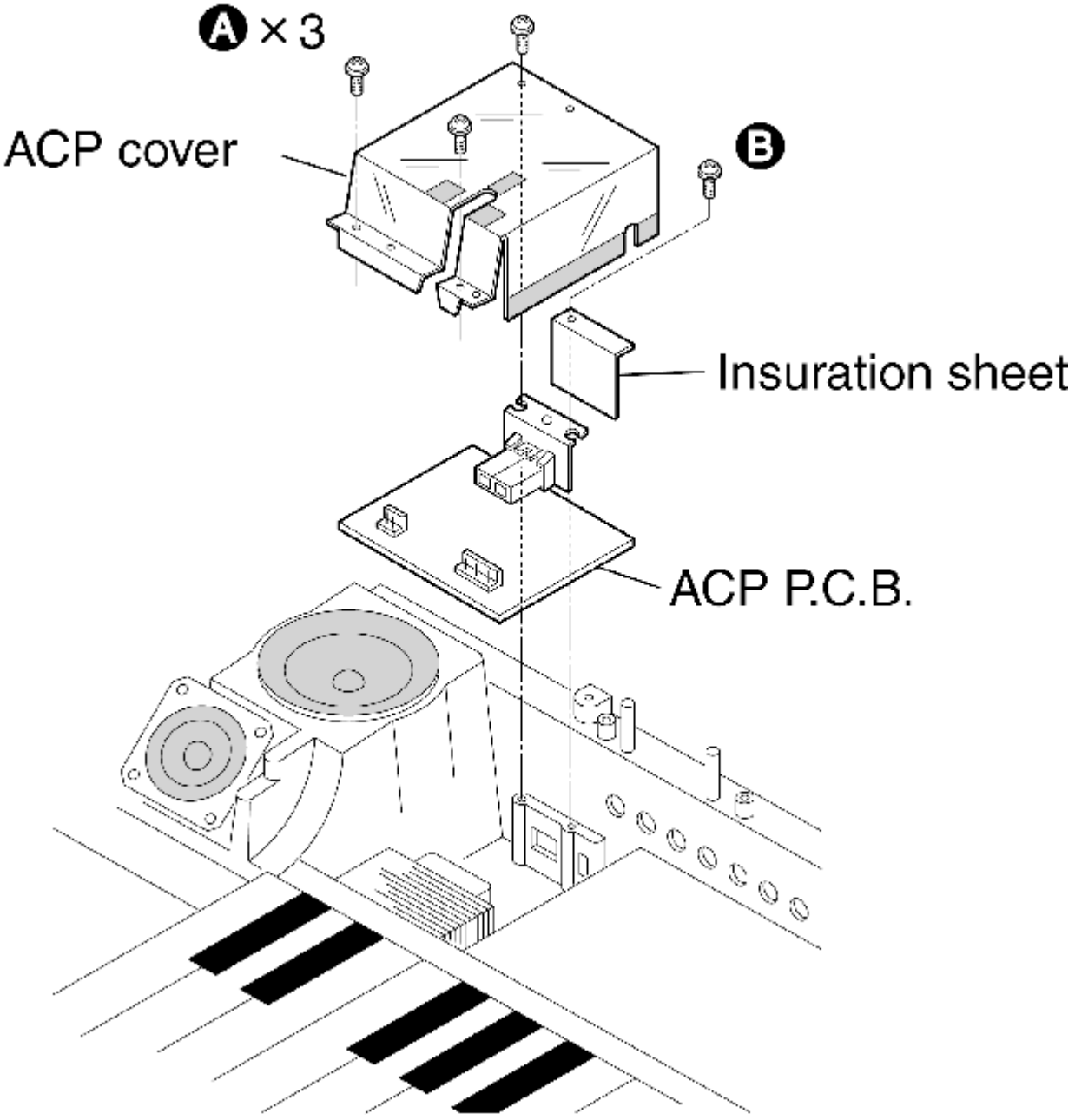

7.6. Removing the LCD, CPL, CPC, CPR, ROT and INV printed circuit boards

- **Remove the control panel (see step "Removing the control panel, power SW panel, SD panel, net panel and keyboard unit ").**
- **Remove the control panel lid holding screws (Ⓗ 10pcs.)as shown in Fig.10 .**

LCD

1. Remove the LCD hinge holding screws (Ⓐ 2pcs.) as shown in Fig.10 .

2. Remove the LCD holding screws (Ⓑ 2pcs.) as shown in Fig.10 .

CPL P.C.B.

1. Pull off the SLIDE VOLUME knob as shown in Fig.10 .

2. Remove the CPL P.C.B. mounting screws (Ⓒ 11 pcs.) as shown in Fig.10 .

CPR P.C.B.

- **Remove the CPR P.C.B. mounting screws (Ⓓ 11 pcs.) as shown in Fig.10 .**

ROT P.C.B. , CPC P.C.B. and INV P.C.B.

1. Pull off the TEMPO/PROGRAM dial as shown in Fig.10 .

2. Remove the ROT P.C.B. mounting screws (Ⓔ 2 pcs.) as shown in Fig.10 .

3. Remove the CPC P.C.B. mounting screws (Ⓕ2pcs.) as shown in Fig.10 .

4. Remove the INV P.C.B. mounting screws (Ⓖ 2 pcs.) as shown in Fig.10 .

Fig.10

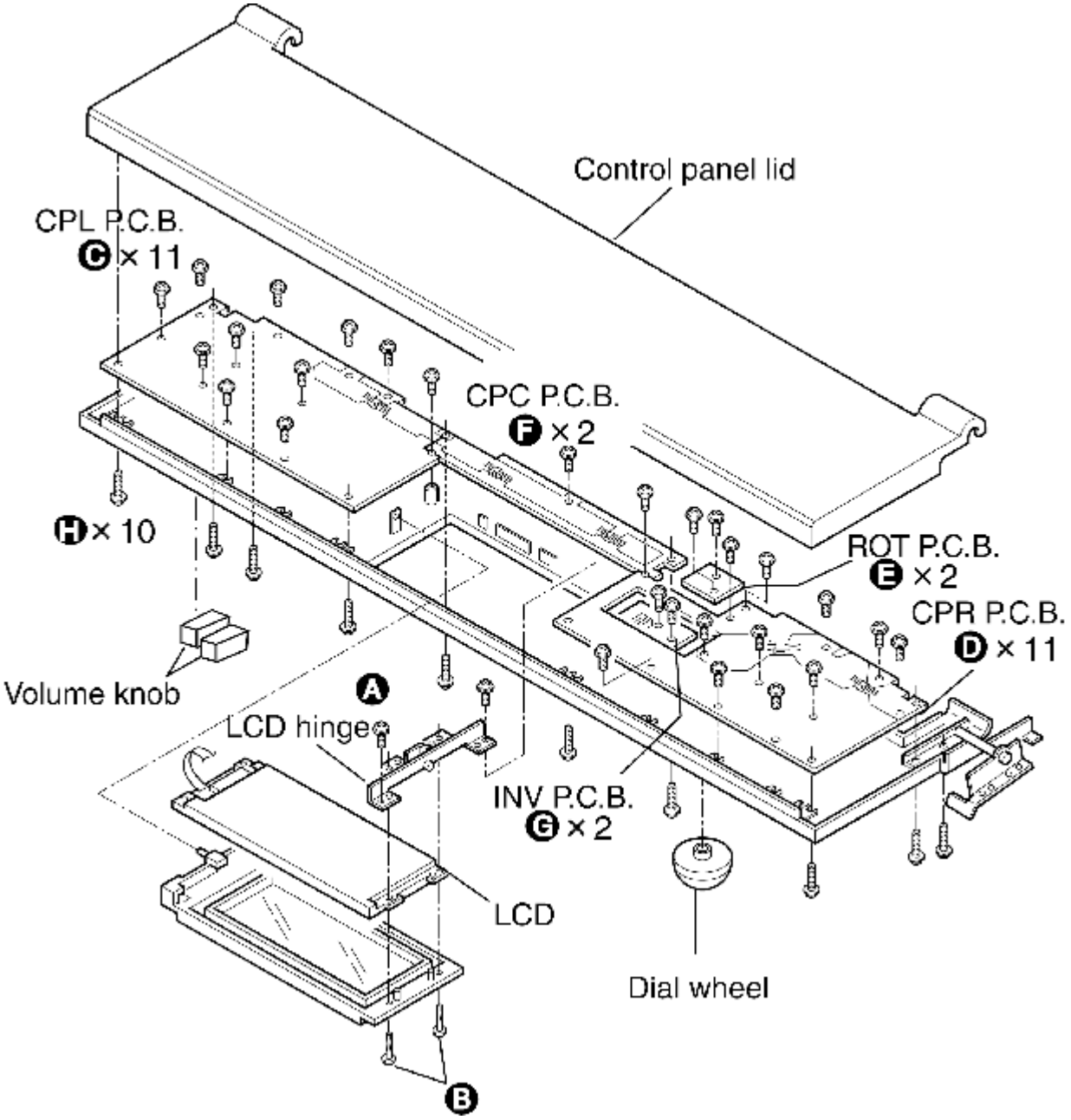

7.7. Removing the SD and SDSW printed circuit boards

- **Remove the SD panel (see step "Removing the control panel, power SW panel, SD panel, net panel and keyboard unit ").**

SD P.C.B.

- **Remove the SD P.C.B. mounting screws (A 2pcs.) as shown in Fig.11 .**

SDSW P.C.B.

- **Remove the SDSW P.C.B. mounting screws (Ⓑ 3 pcs.) as shown in Fig.11 .**

Fig.11

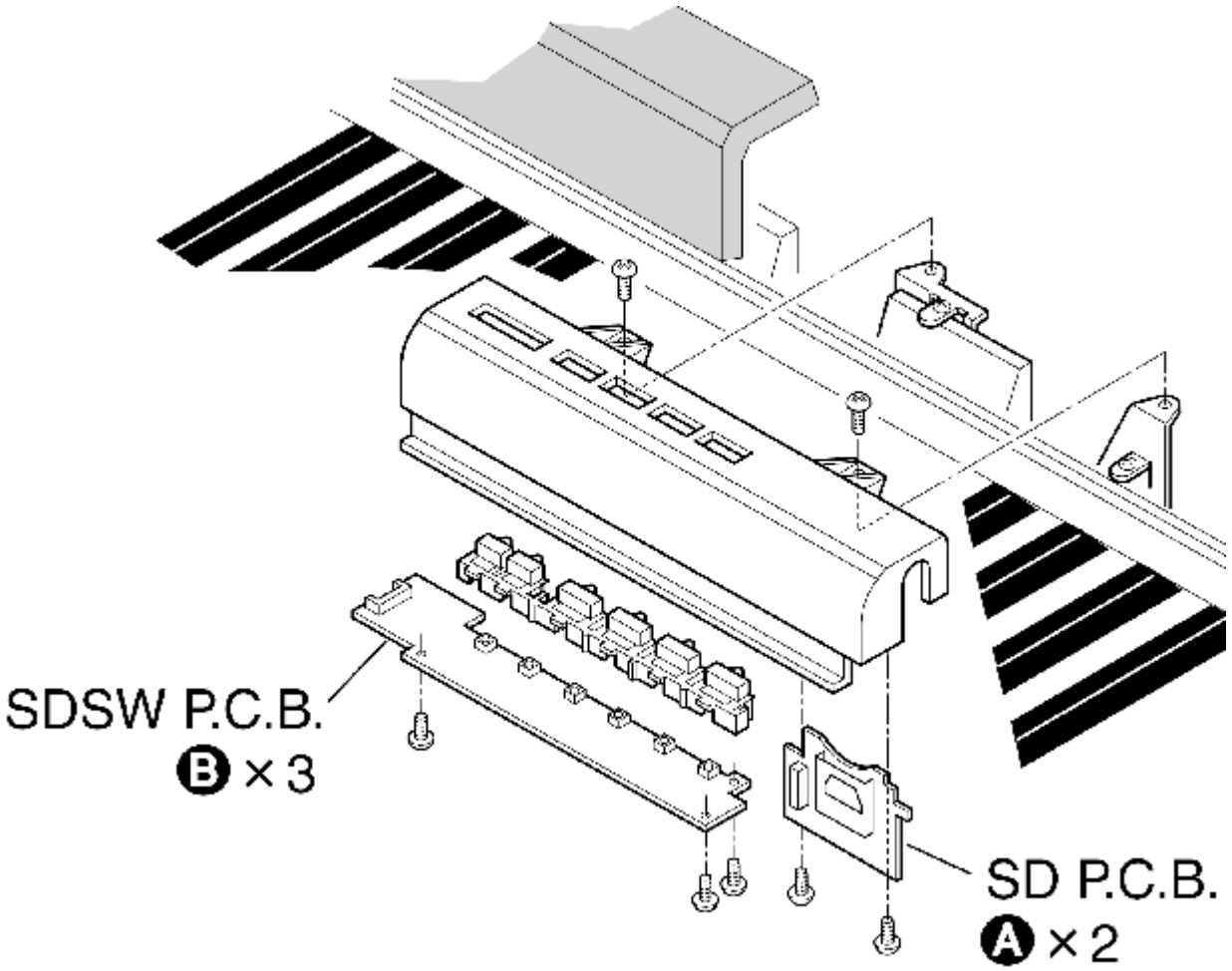

7.8. Removing the BEND and the HP P.C.B.

- **Remove the top cabinet (see step "Removing the top cabinet ").**

BEND P.C.B.

- **Remove the BEND P.C.B. mounting screws (Ⓐ 2 pcs.) as shown in Fig.12 .**

HP P.C.B.

- **Remove the HP P.C.B. mounting screw(Ⓑ) as shown in Fig.12 .**

Fig.12

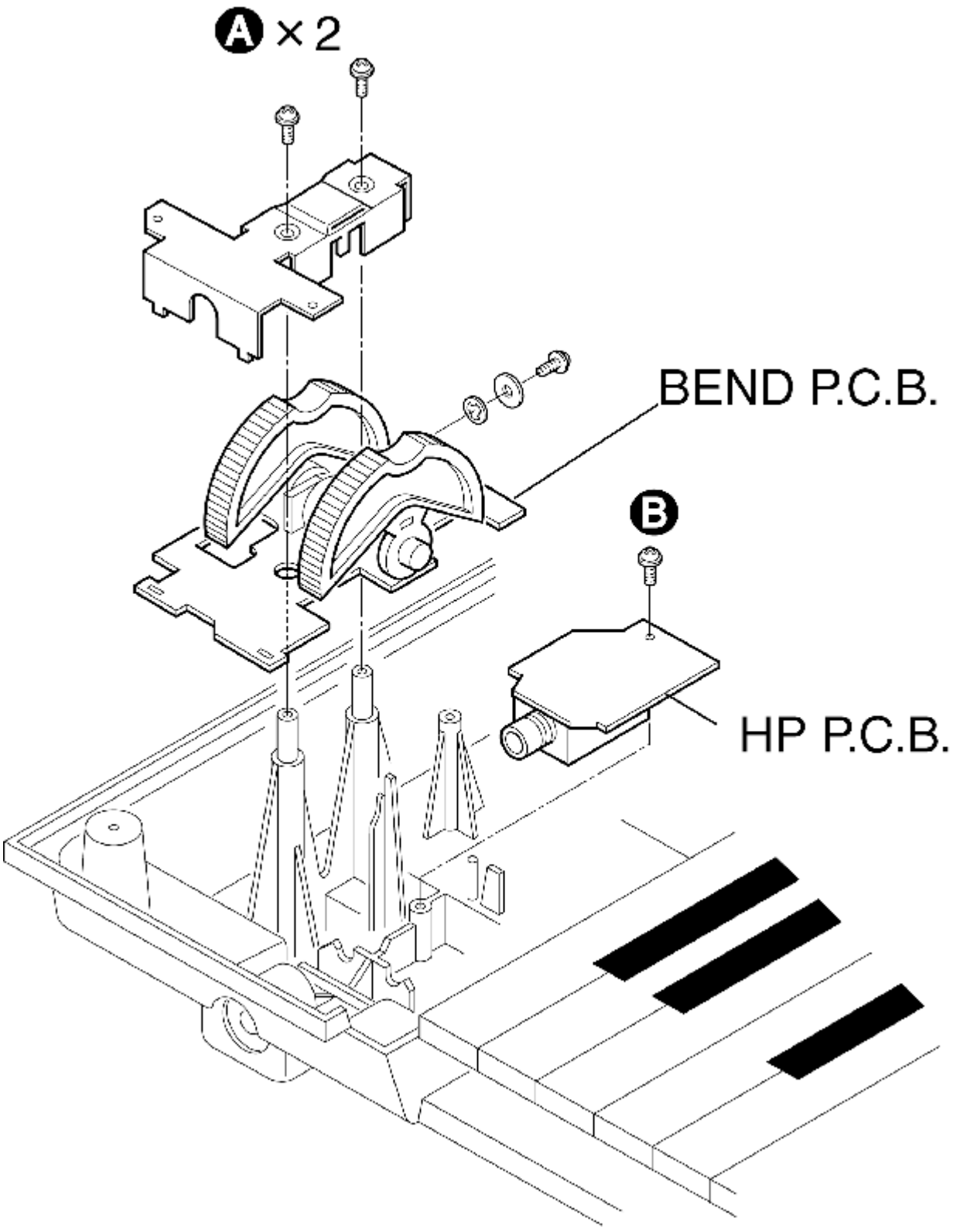

7.9. Removing the Disk Drive Unit

1. Remove the Disk Drive unit mounting screws (Ⓐ 4 pcs.) as shown in Fig.13 .

2. Remove the Disk Drive unit holding screws (Ⓑ 4 pcs.) as shown in Fig.13 .

Fig.13

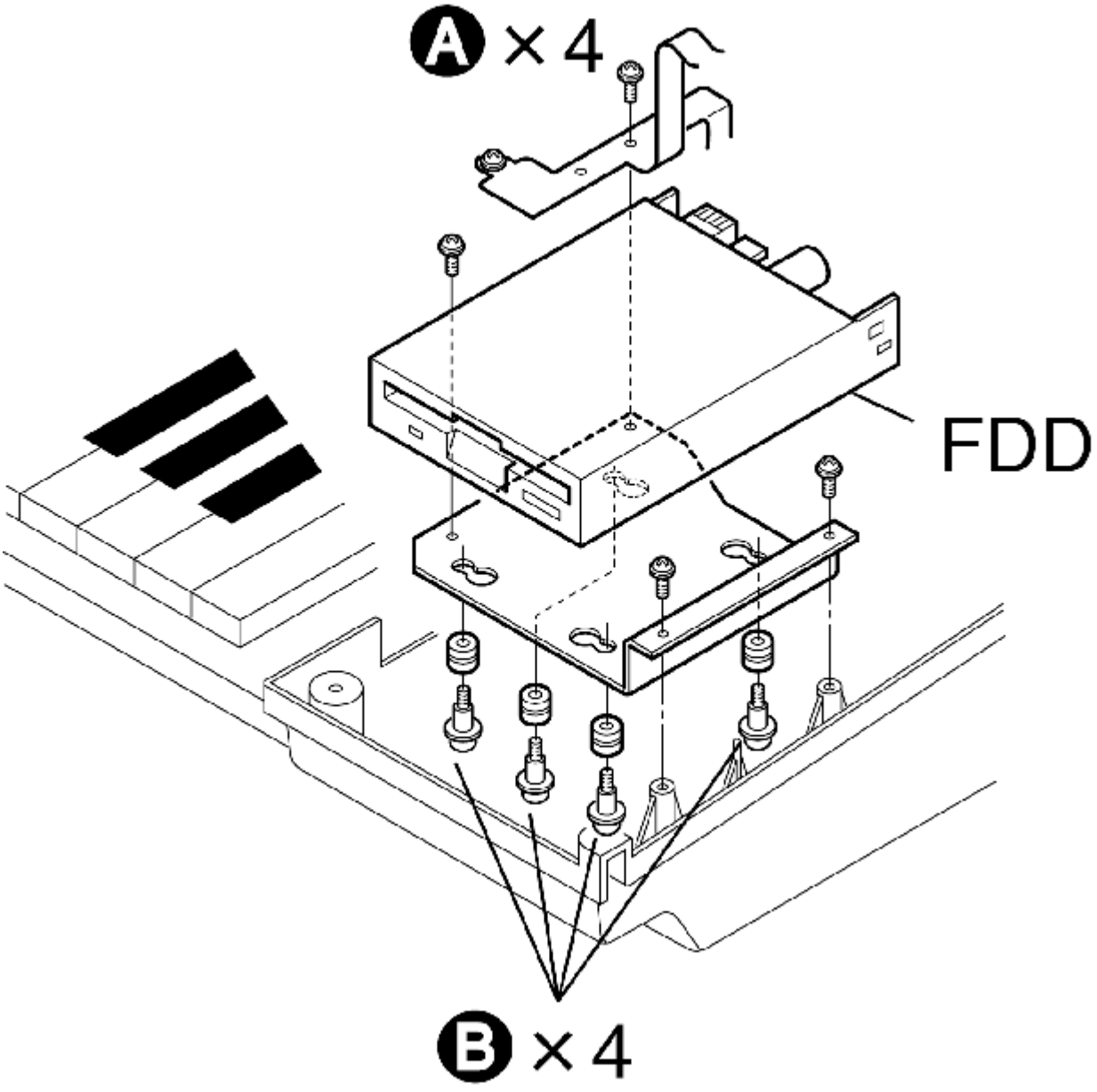

7.10. Removing the Power SW

1. Remove the Power SW panel (see step "Removing the control panel, power SW panel, SD panel, net panel and keyboard unit ").

2. Remove the power SW mounting screws (Ⓐ 2pcs.) as shown in Fig.14 .

Fig.14

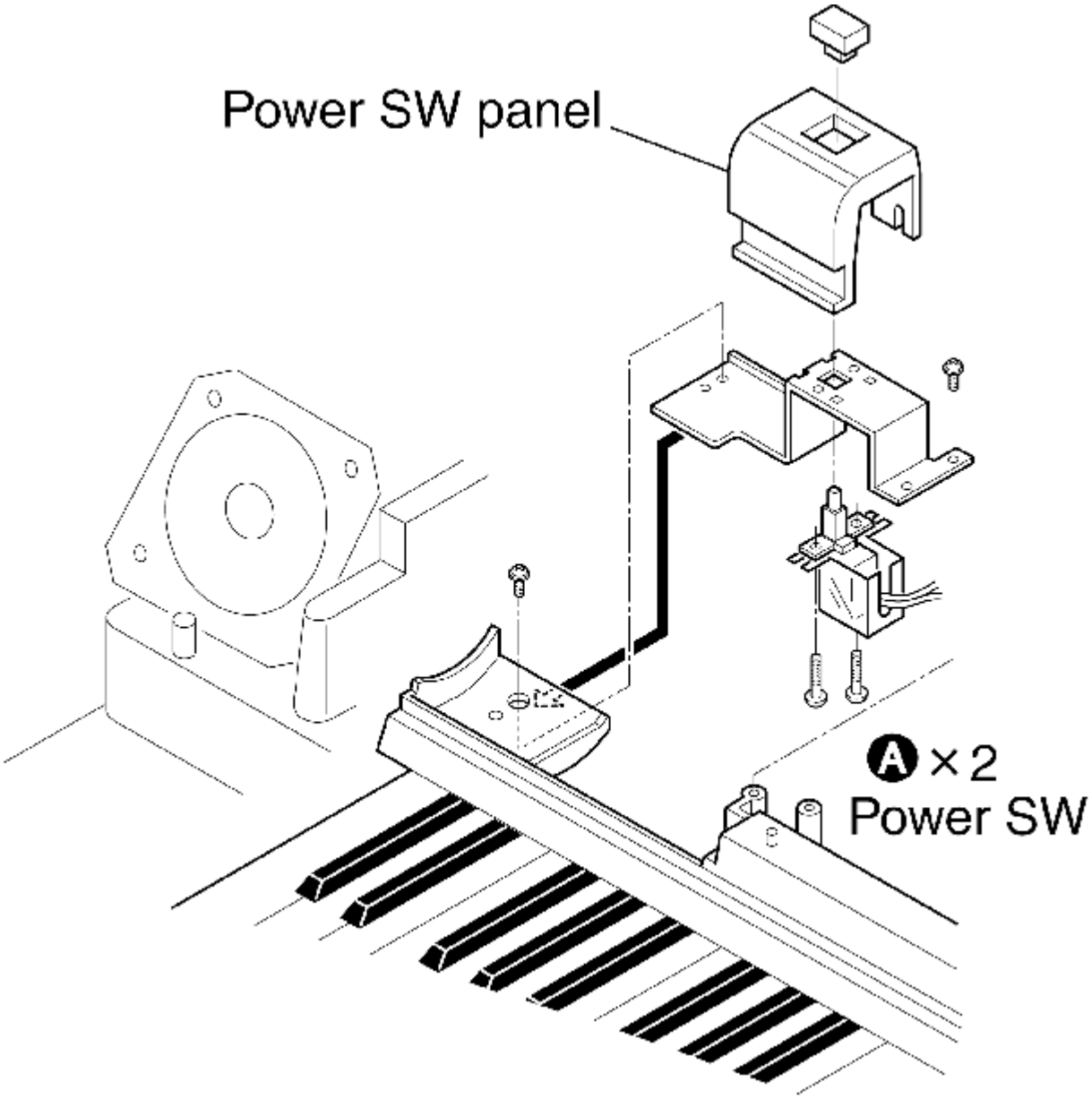

7.11. Removing the 14cm SP, 12cm SP and 6.5cm SP

- **Remove the top cabinet (see step "Removing the top cabinet ").**

14 cm SP

- **Remove the 14 cm SP@holding screws (Ⓐ4pcs.) as shown in Fig.15 .**

12 cm SP

- **Remove the 12 cm SP holding screws (Ⓑ4pcs.) as shown in Fig.15 .**

6.5 cm SP

- **Remove the 6.5 cm SP holding screws (Ⓒ4pcs.) as shown in Fig.15 .**

Fig.15

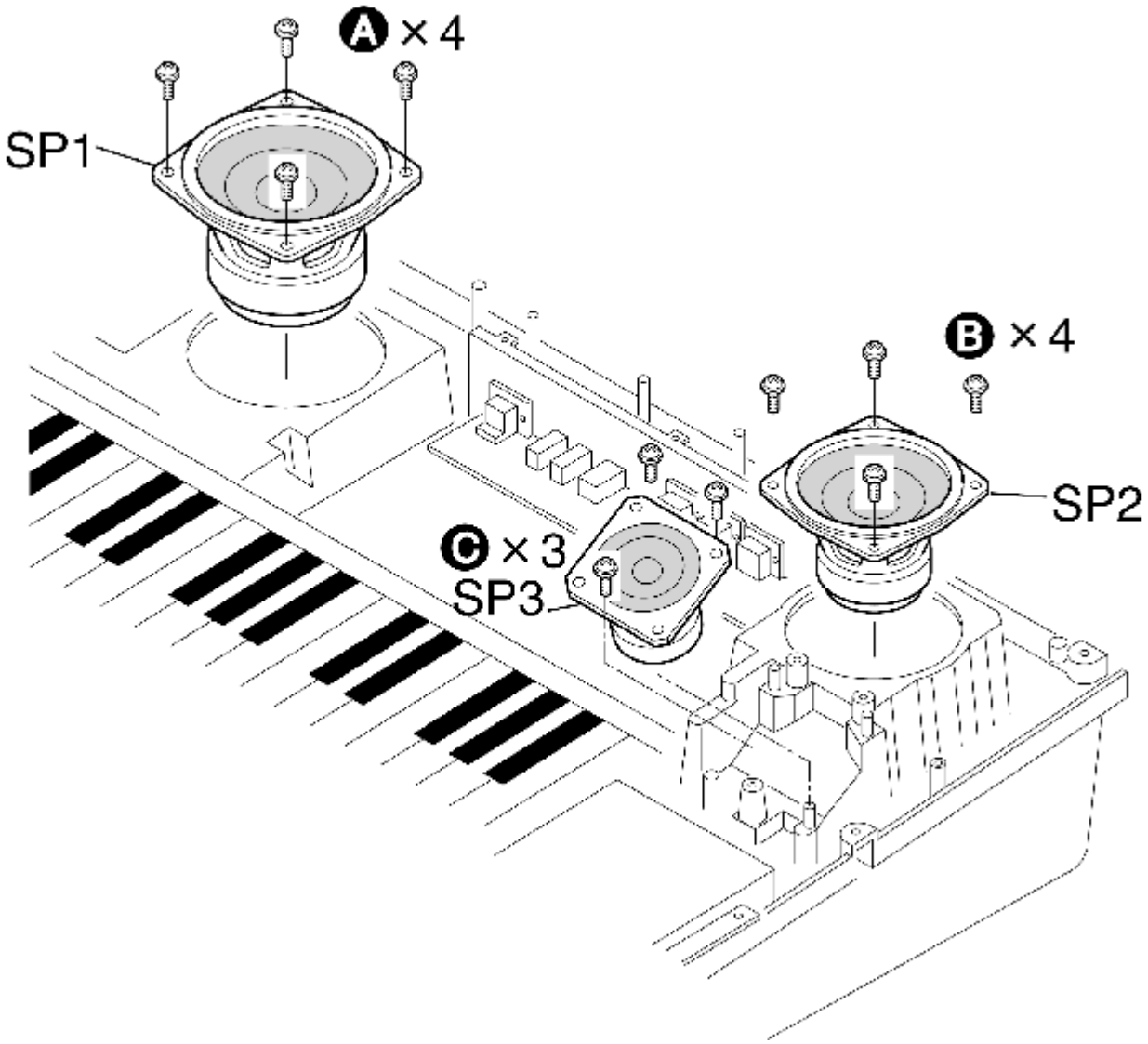

7.12. Removing the keys

- **Remove the keyboard unit (see step "Removing the control panel, power SW panel, SD panel, net panel and keyboard unit ").**

1. **Press downward on the rear of the key as shown in Fig.16 .**
2. **While pressing downward on the rear of the key, push the key forward and release it from the chassis.**
3. **Lift the key and remove it from the chassis.**

Fig.16

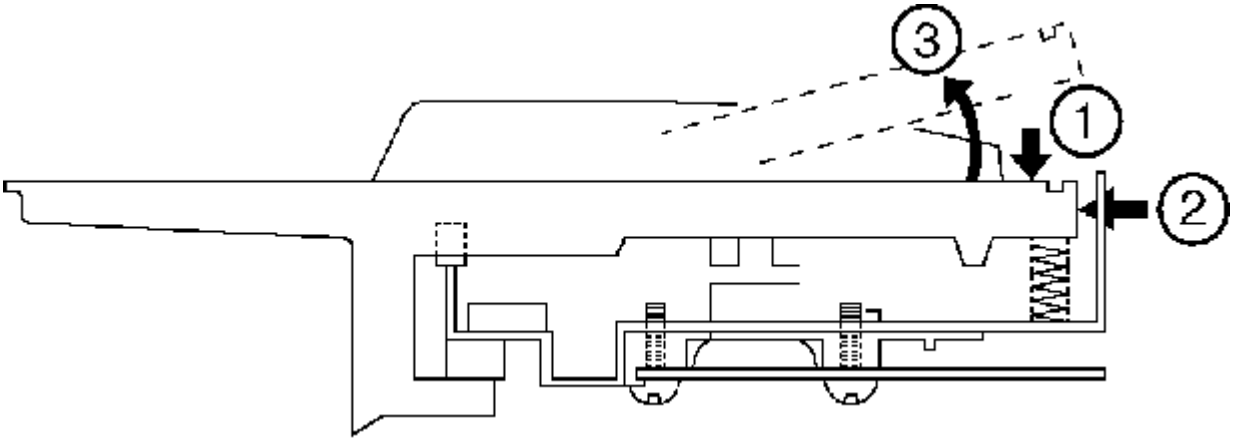

NOTE:
To remove a black key, the white key to either side of it should be removed first.

8. Service Diagnostic Function

The service diagnostic function makes it possible to determine whether the various test modes pass or fail. The test modes are completely independent of one another. Select a test mode as necessary, and run the test.

To set to the service diagnostic mode:

1. **Press and hold the C#3, D#3, C#4 keys, and then turn on the power switch. (refer to Fig.20)**

Fig.20

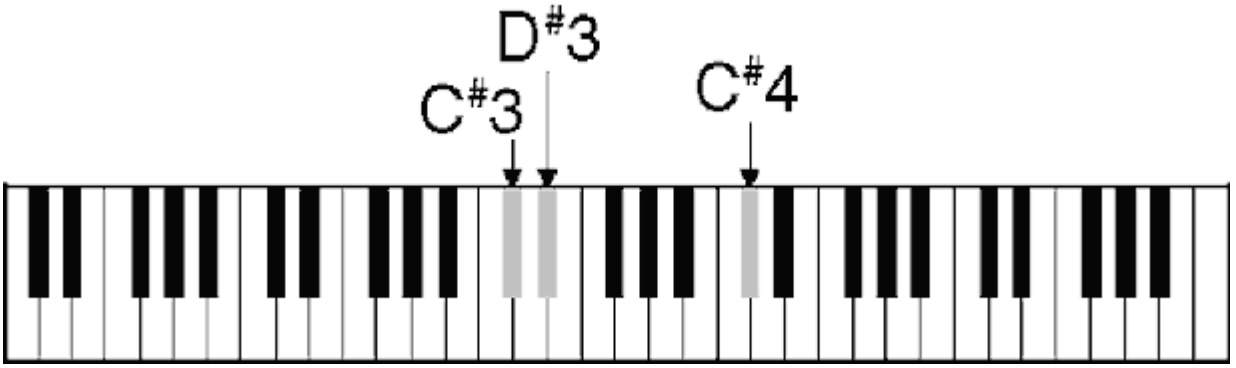

2. After the service diagnostic screen is displayed on the LCD, release the three keys. (refer to Fig.21)

3. Use the corresponding buttons below the “page select” display to select the respective test.

Fig.21

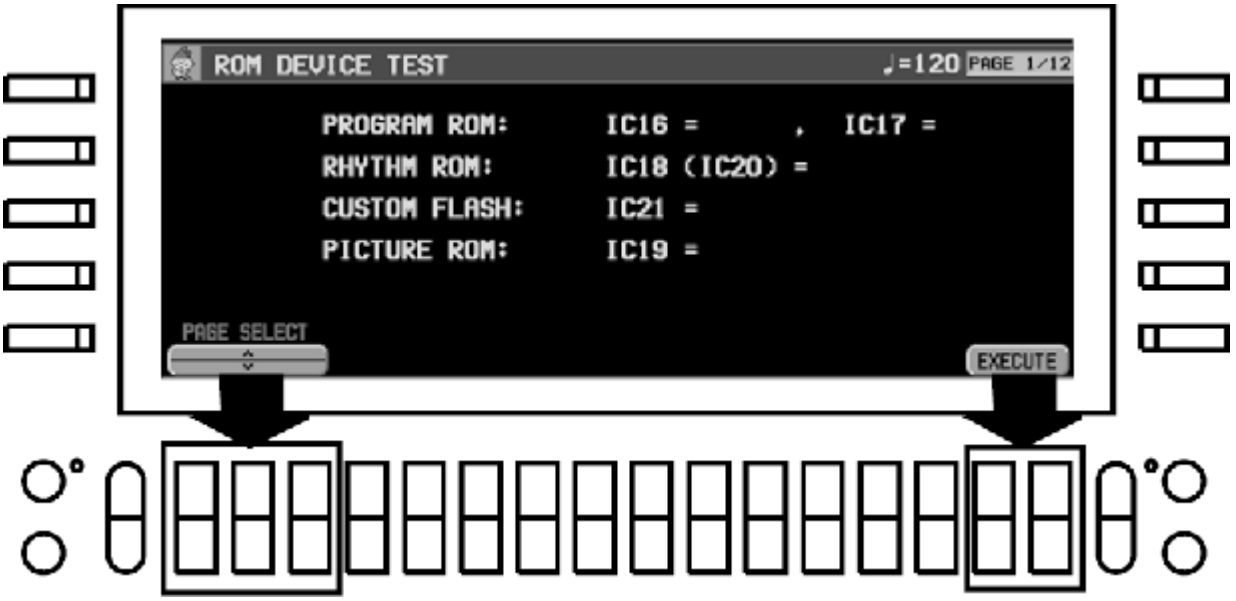

8.1. ROM device test

Fig.22

- **Press the EXECUTE button to begin the test.**
- **The test result (OK or NG) is displayed within twenty seconds. If the test result is NG, not only the respective IC, but also a break or short circuit in the ADDRESS/ DATA BUS as well as in any of the strobe signal lines may be the causeof thefailure. (refer to Fig.22)**

8.2. RAM device test

Fig.23

- **Press the EXECUTE button to begin the test.**
- **The test result (OK or NG) is displayed within a few seconds. If the test result is NG, not only the respective IC, but a break or short circuit in the ADDRESS/DATA BUS as well as in any of the strobe signal lines may be the causeofthe failure. (refer to Fig.23)**

8.3. Other device test

Fig.24

- **Press the EXECUTE button to begin the test.**
- **The test result (OK or NG) is displayed with in a few seconds. If the test result is NG, not only the respective IC, but also a break or short circuit in the ADDRESS/ DATA BUS as well as in any of the strobe signal lines may be thecause of thefailure. (refer to Fig.24)**

8.4. Floppy Disk SAVE/LOAD test

Fig.25

- **Insert a formatted floppy disk into the Disk Drive. Press the START button to begin the test.**
- **The test is carried out repeatedly. Data is saved and loaded, and then the two data sets are compared. The number of times that the test results in OK or NG are counted and displayed on the LCD. To interrupt the test, press the STOP button.(referto Fig.25)**
- **Even when the Floppy Disk Drive is functioning properly, the test can result in NG. If this happens frequently, clean the magnetic heads of the Floppy Disk Drive with a**

cleaning disk. Then, change the disk used in testing with another disk andreperformthe test. If the trouble is not solved, it is likely that the Disk Drive unit or some other part of the hardware is broken.

8.5. Panel SW & LED test

Fig.26

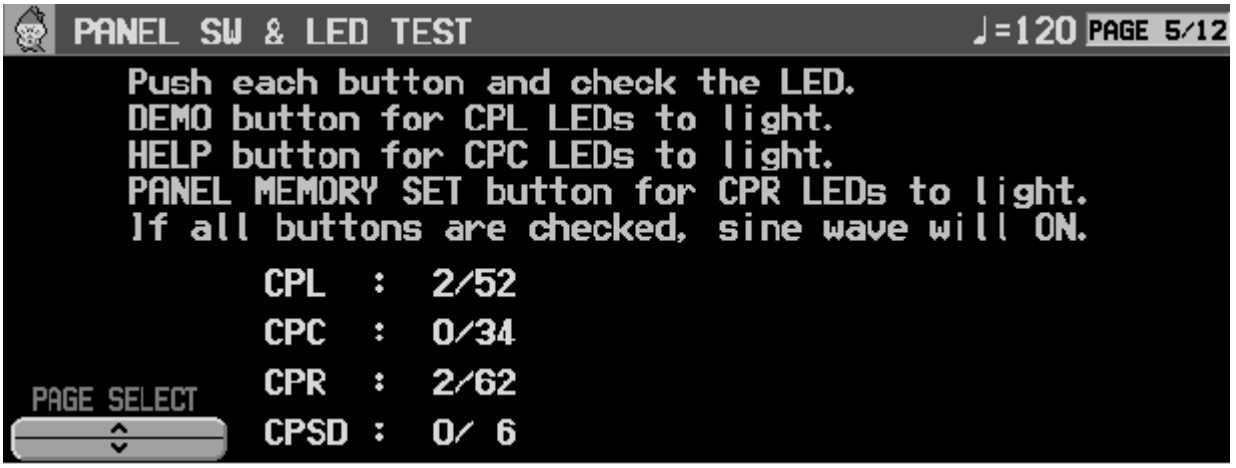

- Press all the buttons on the Control Panel and confirm that the corresponding LED lights.
- If an LED fails to light, the cause may be a defective switch or a break in the surrounding circuit, etc.
- After all the buttons have been pressed, all the PANEL MEMORY LEDs light. If all switches are OK, “ALL DEVICE OK” is shown on the LCD. (If a switch is defective, nothing is shown.) (refer to Fig.26)
- To light all the LEDs, press and hold the DEMO button. If an LED fails to light, the LED may be defective or there may be a break in the surrounding circuit.

8.6. LCD module test (LCD adjustment and confirmation)

Fig.27

- **Press the RGBWB, CROSSTALK, SAMPLE, CONTRAST or VIDEO OUT button to begin the respective test. (refer to Fig.27)**

RGBWB:

All the dots light in red, green, blue, white, and finally black. The display can be held by pressing the DISPLAY HOLD button.

CROSSTALK:

An H pattern is shown. LCD crosstalk can be evaluated. To exit this test, press the EXIT button.

SAMPLE:

Several display patterns shown during normal use are shown. The display can be held by pressing the DISPLAY HOLD button.

CONTRAST:

The test pattern is shown. Adjust the contrast by the CONTRAST control on the right of the LCD. To exit this test, press the EXIT button.

VIDEO OUT:

Check each display mode of PAL and NTSC. To exit this test, press the EXIT button.

- **If the correct display is not shown during these tests, the LCD or LCD drive circuit may be defective.**

8.7. In & Out interface test

Fig.28

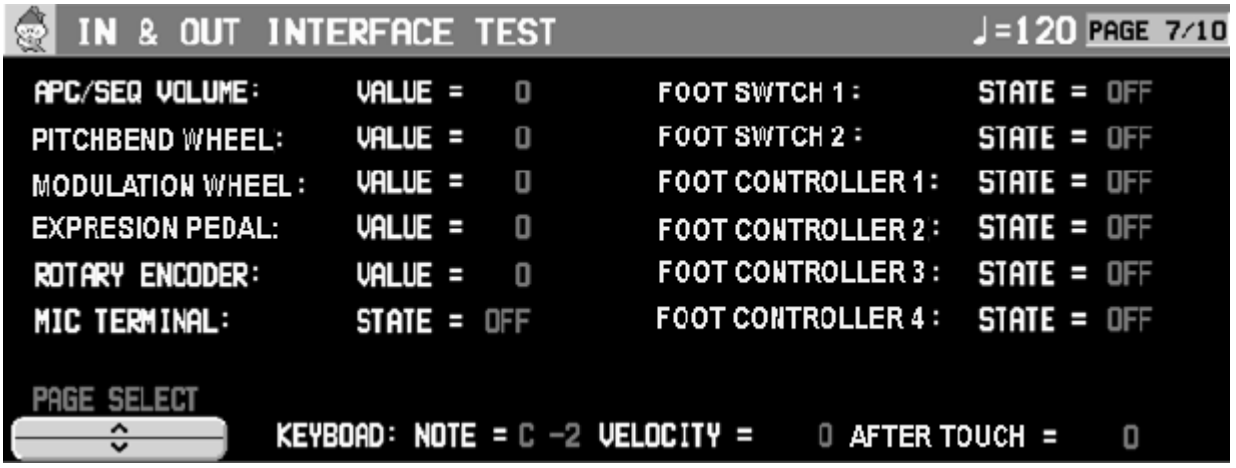

- **The operation status of each input action part can be confirmed. If the part is operating properly, "OK" is shown, excluding the Expression Pedal. (refer to Fig.28)**
- **When a keyboard key is pressed, the corresponding pitch and velocity aftertouch is displayed (only as long as the key is depressed).**
- **The respective statuses for other input action parts are displayed. (Analog parts are shown as numerical values from 0 to 255, and switches are shown as ON or OFF.)**
- **If the display fails to change when the part is operated, or if the change is abnormal, it may indicate a defective part.**

8.8. MIDI IN/OUT test

Fig.29

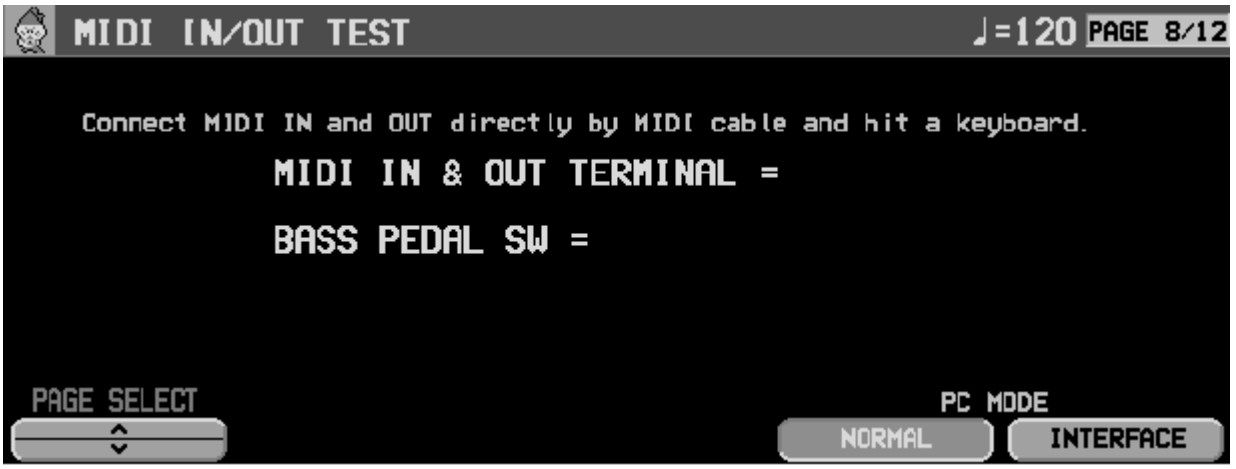

- **First, set the COMPUTER terminal switch to MIDI.**
- **Use a MIDI cable to directly connect the MIDI IN and MIDI OUT terminals.**
- **When a keyboard key is pressed, the transmitted and received data are compared**

and the MIDI terminal operation is indicated as being OK or NG. (refer to Fig.29)

- If NG is shown, check both the IN and OUT terminals, as well as the circuit.

8.9. WAVE ROM test

Fig.30

- Press the EXECUTE button to start the test.
- The test result (OK or NG) is displayed within thirty seconds. If the test result is NG, not only the respective IC, but also a break or short circuit in the ADDRESS/DATA BUS as well as in any of the strobe signal lines may be the causeofthe failure. (refer to Fig.30)

8.10. SOUND SYSTEM test

Fig.31

- Use the button in the SOUND GROUP to select an item from 1 to 6 (refer to Fig.31 and Fig.32). Press a keyboard key.

Fig.32

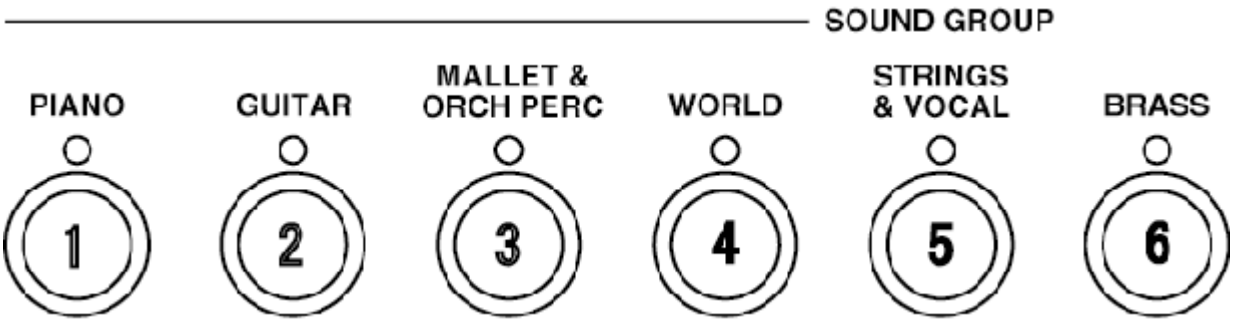

1. Generate a full amplitude sine wave in the pitch of each key. (No touch, fixed stereo center).
If no sound is generated or if the sound is distorted, the sound generator ROM corresponding to the key position is defective.

2. For confirming the output pathway from the sound generator. (Fixed scale, no touch)
The Lch and Rch sound outputs are confirmed separately.

3. Generate a full amplitude sine wave in the pitch of each key +2 octaves. (No touch, fixed stereo center)
By generating a sound frequency outside the normal keyboard zone, you can confirm whether or not there is an abnormality in the sound output frequency zone.

4. Generates a full amplitude sine wave in the pitch of each key -2 octaves. (No touch, fixed stereo center)
By generating a sound frequency outside the normal keyboard zone, you can confirm whether or not there is an abnormality in the sound output frequency zone.

5. Generate a sine wave in the pitch of each key with touch.
You can confirm if the volume changes depending on the touch.

6. Generate a full amplitude sine wave in the pitch of each key at a -16 dB volume. (No touch, fixed stereo center)
You can confirm the same sound output as in 1, at a lower volume.

8.11. SD test

Fig.33

Load/save test

- **Insert the SD card. Press the START button to begin the test.**
- **The test is carried out repeatedly. Data is saved and loaded, and then the two data sets are compared. The number of times that the test results in OK or NG are counted and displayed on the LCD. To interrupt the test, press the STOP button.(referto Fig.25)**

Audio test

- **Insert the SD card. Press the START button to begin the test.**

8.12. WAVE EXPANSION BOARD test

Fig.34

- **Insert the SY-EW01,EW02,,EW03 or EW04 board.**

- **Press the EXECUTE button to start the test.**
- **The test result (OK or NG) is displayed . If the test result is NG, not only the respective IC, but also a break or short circuit in the ADDRESS/DATA BUS as well as in any of the strobe signal lines may be the causeof the failure. (referto Fig.30)**

9. Precautions before Servicing the Main Circuit

This model employs a FLASH ROM (EEPROM) for the PROGRAM ROMs and the CUSTOM DATA ROM. If changing any of these ICs, service the MAIN CIRCUIT as explained here following.

9.1. About the FLASH ROM

The FLASH ROM can be electrically erased and rewritten. This model is designed so that the repair technician can easily write and change programs and data in the FLASH ROM, by using a floppy disk. (refer to Fig.33)

Fig.33

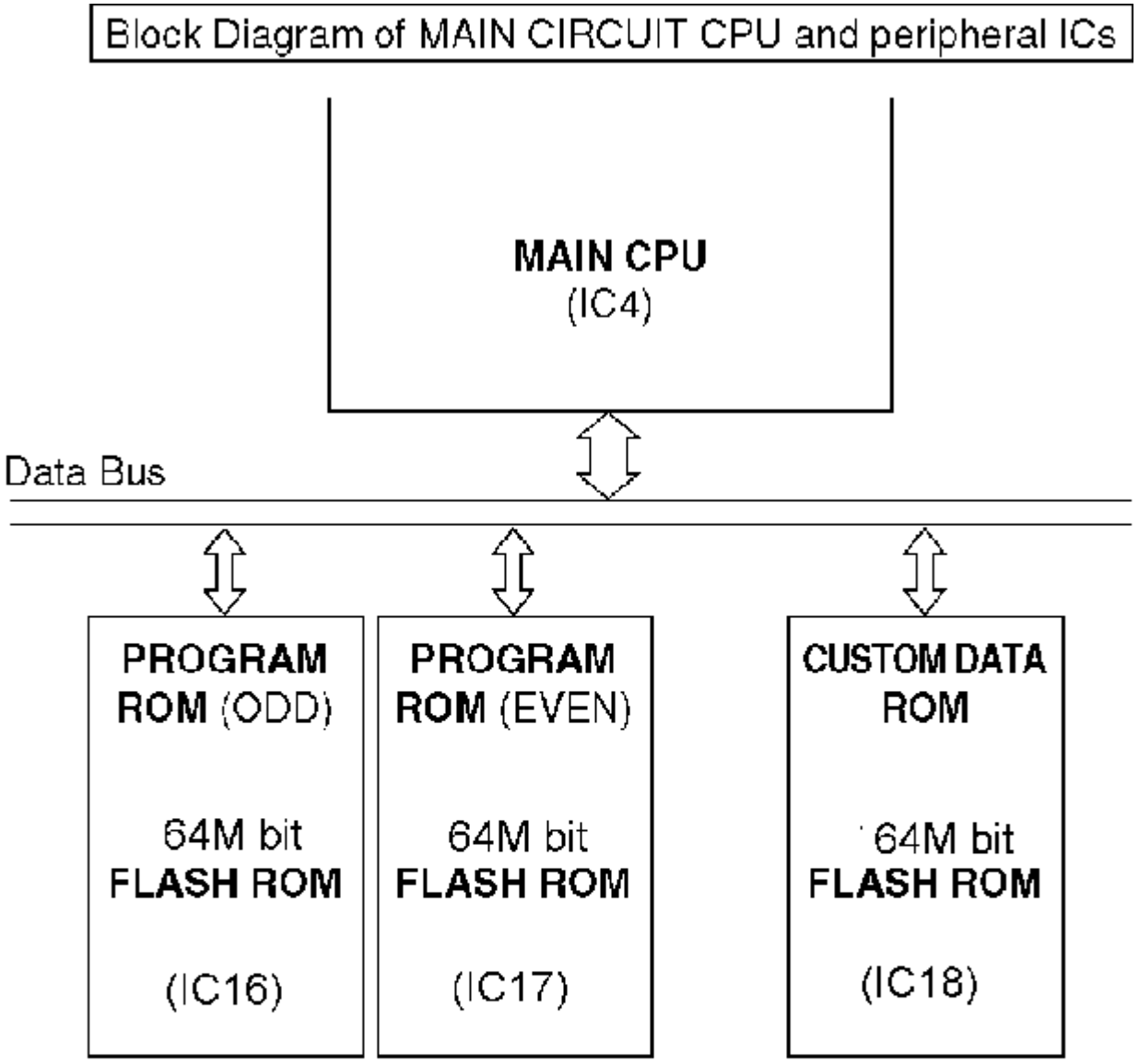

* FLASH ROM contents
IC16 : MAIN CPU program (ODD)
IC17 : MAIN CPU program (EVEN)
IC18 : RHYTHM & ACCOMP data for the RHYTHM GROUP/CUSTOM function

9.2. Notes on replacing FLASH ROMs

The replacement parts include a FLASH ROM with a available memory and the PROGRAM DISKs which contains the program to be written into the PROGRAM ROMs. After replacing the PROGRAM ROM, always write the program into it from the

PROGRAM DISKs includedinthe replacement parts. For details on programming, see "After replacing the PROGRAM ROM (IC16/IC17) " .
The CUSTOM DATA ROM stores RHYTHM & ACCOMP data for the RHYTHM GROUP/ CUSTOM function. The initial RHYTHM & ACCOMP data is factory-set in the CUSTOM DATA ROM at the time of shipping. The CUSTOM DATA ROM can also store COMPOSERdatathat the user creates. However, user-data is lost when the CUSTOM DATA ROM is replaced. After replacing the CUSTOM DATA ROM, default the data in it with the INITIAL DATA DISK attached to this product. For details on defaulting, see "After replacing the CUSTOM DATA ROM (IC18) ".

9.3. About the replacement parts

The same FLASH ROM with a available memory can be used for the PROGRAM ROMs (IC16/IC17). Moreover, the included PROGRAM DISKs contains all programs. Therefore, the replacement parts can be used for IC16 and IC17.

9.4. How to write program/data into FLASH ROMs

9.4.1. After replacing the PROGRAM ROM (IC16/IC17)

1. **Set the PROGRAM DISK 1 included in the replacement parts into the Floppy Disk Drive.**
2. **Hold down the PANEL MEMORY buttons 1 , 2 , 3 and 4. And turn on the power switch. (refer to Fig.34)**

Fig.34

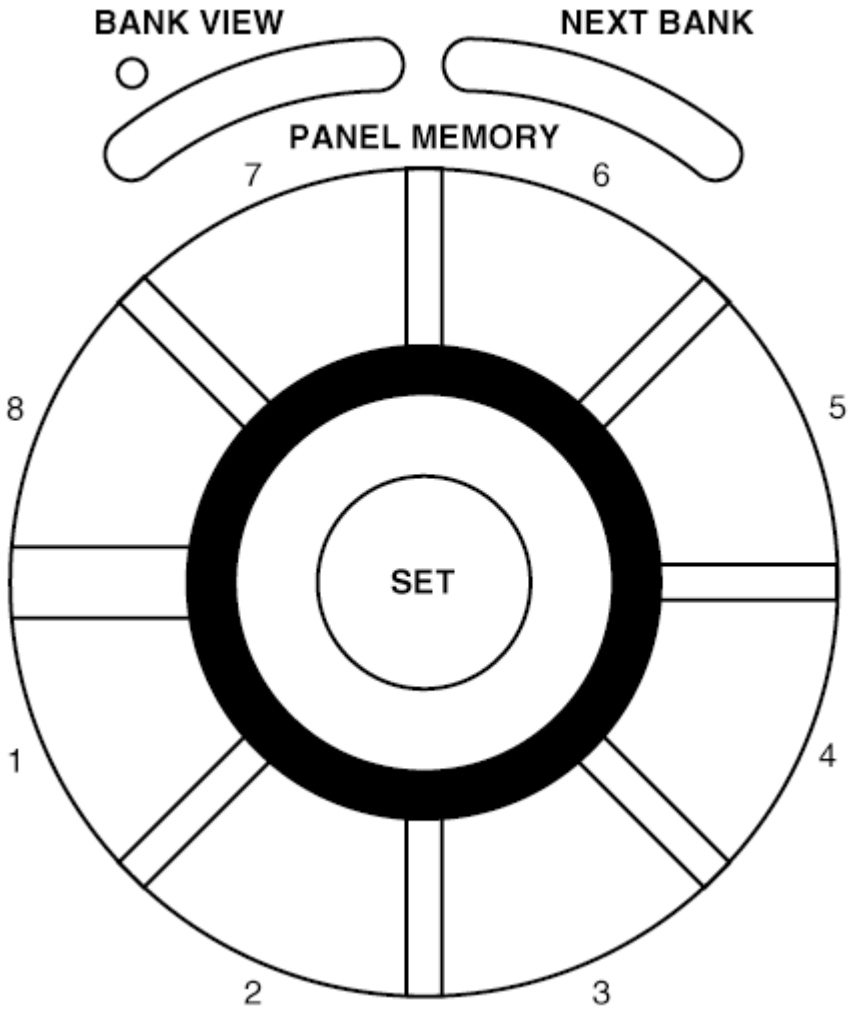

3. Check “Flash Memory Update” is displayed on the LCD, and release the PANEL MEMORY buttons.
   The program will be written into the FLASH ROM automatically. Replace the floppy disk when instructed.
4. When the operation is complete, “Completed!!” will be displayed on the LCD.
5. Turn the power switch off and then turn it on again. Check the instrument is functioning properly.

9.4.2. After replacing the CUSTOM DATA ROM (IC18)

1. With the normal display displayed on the LCD, set the INITIAL DATA DISK included with the model into the Floppy Disk Drive.
   The normal display automatically changes to the DISK MENU display.
2. Select “LOAD” to change to the file select display.
3. Move the highlighting cursor to “CTMINI” in “No. 01” and select “LOAD”.
   “PLEASE WAIT...” will appear on the LCD and the model will start defaulting data in the CUSTOM DATA ROM.

4. When the operation is complete, “Completed!!” will be displayed on the LCD.
5. Turn the power switch off and then back on again. Check the instrument is functioning properly.

10. Measurements and Adjustments

ADJUSTMENT	MEASURING CONDITIONS	EQUIPMENT	ADJUSTMENT P.C.B.	ADJ. POINT	CONNECT METER TO	METE READI
TER TOUCH SENSOR nsitivity	any position	Oscilloscope	MKB3 P.C.B.	VR1	CN11-3pin	5.0V
	1. Press one of the any keys hardly and check the CN11-3 pin voltage. The voltage will increase and become steady. 2. Adjust the voltage to 5.0V with VR1 at that time.					

11. Precautions before Servicing

11.1. Precautions for measuring of the output waveforms

1. The waveform was measured with a “National Digital Storage Oscilloscope VP-5730A”. Therefore the waveforms of musical tone signals shown may differ somewhat due to the difference in the timing of triggering.
2. Since the 1/10 test probe is used, the indicated voltage value on the bottom part of each waveform illustration is 1/10 of the actual value (e.g. 0.2 V/cm should be 2.0 V/cm).
3. To measure the waveforms, first set this unit to the service diagnostic mode (refer to “WAVE ROM test ”). The WAVE ROM output will then be output as a sine wave to facilitate the servicingcheck.

11.2. Important safety notice

- Components identified by a ⚠ mark have special characteristics impotant for safety.
- When replacing any of these components, use only manufacture’s specified parts.

11.3. Symbolic Marks

The symbolic marks for resistors and capacitors which used in this circuits are classified as following Table-1 and Table-2 .

11.3.1. RESISTORS

- **Resistors without symbolic mark are FIXED CARBON FILM RESISTORS (ERD-type).**
- **All resistors are 1/4 WATT, ±5 % TOLERANCE unless otherwise designated in schematic diagrams.**

Table-1

SYMBOL	SPECIFICATION
	Fixed Carbon Film Resistors "FLAME-PROOF" (ERD—F—type)
	Fixed Wire Wound Resistors "FLAME-PROOF" (ERF—type)
	Fixed Metal Oxide Film Resistors "FLAME-PROOF" (ERG—type)
	Fixed Metal Film Resistors "FLAME-PROOF" (ERX—type)
	Fixed Metal Film Resistors (Precision and High Stability) (ERO—type)
	Fuse Type Fixed Metal Oxide Film Resistors "FLAME-PROOF" (ERQ—type)
	Fuse Type Fixed Carbon Film Resistors "FLAME-PROOF" (ERD2FC—type)

11.3.2. CAPACITORS

- **Capacitors without symbolic mark are POLYESTER CAPACITORS. (ECQM-type, ECQG-type, ±10% Tolerance)**
- **Polarized capacitors without symbolic mark are Aluminum Electrolytic Capapcitors. (ECEA-type, ±20% Tolerance)**

Table-2

SYMBOL	SPECIFICATION	TYPE
	Non-Polarized Electrolytic Capacitors	ECEA_KN_type
	Non-Polarized Electrolytic (for Network system)	ECEA_Y_type
	Tantalum Solid Electrolytic Capacitors	ECS_type
	Metalized Plastic Film Capacitors (TF Series)	ECQV_type
	Temperature Compensating Ceramic Capacitors	ECC_type
	High-Dielecytric Constant Ceramic Capacitors	ECK_type ECR_type
	Axial Lead Ceramic Capacitors	ECB_type
	Metalized Polyester Film Capacitors for Across the Line	ECQ_EW_type
	Aluminum Electrolytic Capacitors for Smoothing Circuit	ECES_type
	Multilayer Ceramic Chip Capacitors	ECUV_type

12. MEASURING CONDITION

■Printed Circuit Board and Schematic Diagram

■Measuring Condition of MAIN P.C.B.

Check Point ❶ - ❺

Set to the self-diagnostic mode following.

- While pressing two E keys (①) simultaneously turn on the power switch.
- SOUND ..... BRASS
- Main Volume ..... MAX
- Keyboard ..... C♯ (②)

Check Point ❶

Set the initial setting mode (Refer to "1. Initialize")

❶ **RESET**

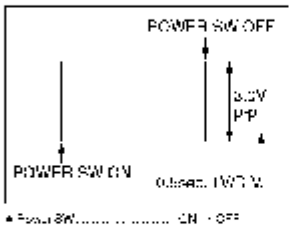

* Power SW ..... ON → OFF

❷ **TG CLOCK**

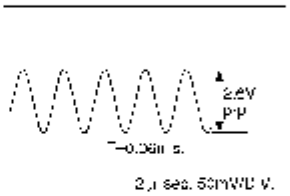

❸

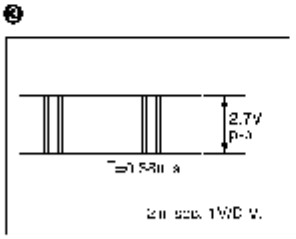

❹

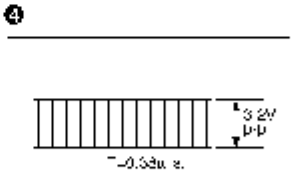

❺

■ Measuring Condition of FAJ P.C.B.

Check Point ❸ ❹

Set to the self diagnostic mode to lowings

- While pressing two E keys (①) simultaneously, turn on the power switch
- SOUND — BYPASS
- Main Volume — MAX
- Keyboard — C4 (②)

Check Point ❶ ❷

Set the initial setting mode (Refer to page T-6)

❶ SNS, ❷ PMUT

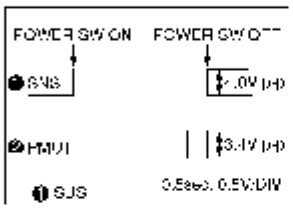

❸ HPL, ❹ HPR

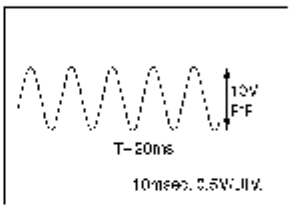

❺ SPL, ❻ SPR

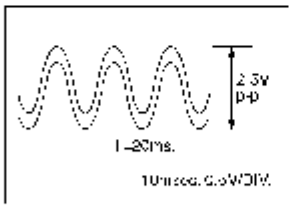

❼ SUML, ❽ SUMR

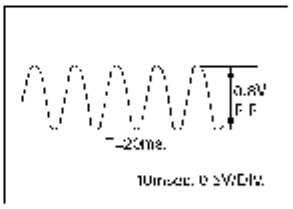

❾ SPW

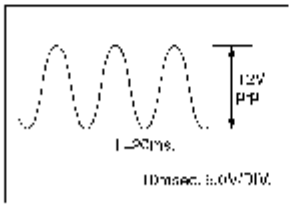

13. SCHEMATIC DIAGRAM

14. Printed Circuit Board

15. Block Diagram

16. Wiring Connection Diagram

17. Replacement Parts List

Notes:
***Important safety notice:**
Components identified by ⚠ mark have special characteristics important for safety. Funrthermore, special parts which have purposes of fire-retardant (resistors), high-quality sound (capacitors),low-noise(resistors), etc. are used.
When replacing any of components, be sure to use only manufacture's specified parts shown in the parts list.
***Warning: This product uses a laser diode. Refer to caution statements.**
***ACHTUNG:Die lasereinheit nicht zerlegen.Die lasereinheit darf nur gegen einc vom hersteller spezifizierte einheit ausgetauscht werden.**
***Capacity values are in microfarads (uF) unless specified otherwise, P=Pico-farads (pF) F=Farads (F)**

***Resistance values are in ohms, unless specified otherwise, 1K=1,000 (OHM), 1M= 1,000K (OHM)**
***The marking <RTL> indicates that the Retention Time is limited for this item. After the discontinuation of this assembly in production, it will no longer be available.**
***Since SW consists of buttons and P.C.B.'s, we do not supply it as an individual part (refer to "Manual Keyboard Parts and Control Panel Parts Location ".).**
***[SPC] in Remarks columns parts that are supplied by SPC..**
***"<IA>"-"<IG>", marks in Remarks indicate languages of instruction manuals. [<IA> : English, <IB> : French, <IC> : Germany, <ID> :Spanish, <IE> : Danish, <IF> : Netherlands, <IG> : Italian,]**

Ref. No.	Part No.	Part Name & Description	Pcs	Remarks
1	QAQG102AA	TOP CASE UNIT	1	P
1	QAQG102AB	TOP CASE UNIT	1	EXCEP P
2	QMGG071AA	TOP CASE CUSHION	7	
3	QYKG326BA	NET PANEL ASSY	1	
4	XTW3+10Q	SCREW	79	
5	QYAG3009AB	ASSEMBLED MUSIC RACK	1	
6	RFKJXKN7000E	BOTTOM CASE ASS'Y	1	
6	RFKJXKN7000P	BOTTOM CASE ASS'Y	1	
7	SHGG3130A	FOOT	4	
8	QLZG022A	CORE	3	
9	QLZG017A	CORE B	7	
10	XTW3+14Q	SCREW	4	
11	K2AA2G000003	AC IN COVER	1	EXCEPT P PC
11	K2AB2G000003	AC IN COVER	1	P PC
12	XYN4+F20	SCREW	4	P PC
12	XYN4+F25	SCREW	4	EXCEPT P PC
13	XTW3+16JFZ	SCREW	21	
14	QMAG0292AA	MAIN LID	1	
15	QMRG2061AAK	INSULATION SHEET	1	EXCEPT GM GU GT
15	QMRG2063AAK	INSULATION SHEET	1	GM GU GT
16	QMRG2120AA	ACP COVER	1	
17	QQLG241AA	CAUTION LABEL	1	P PC
17	QQLG251AA	CAUTION LABEL	1	EB
18	QQLG253AA	FAJ JACK LABEL	1	
19	QQLG254AA	MAIN JACK LABEL	1	
20	XTV3+10G-M	SCREW	14	
21	XYE3+FJ10	SCREW	30	
22	QLZG025A	CORE	1	
23	QLZG026A	CORE	1	
24	QMRG5300AA	BBD SHEET	7	
25	QSCG138A	SHIELD SHEET	1	
26	XTW3+10TFZ	SCREW	22	
27	XTV3+12G	SCREW	2	
28	SBCG110B	POWER BUTTON	1	
29	QGPG0166AA	P.SW PANEL	1	
30	QMRG2123AA	P.SW COVER	1	
31	QGPG0163AA	CONTROL PANEL	1	P
31	QGPG0163AB	CONTROL PANEL	1	EXCEPT P
32	QGUG1440AD1K	BUTTON	1	

Ref. No.	Part No.	Part Name & Description	Pcs	Remarks
33	QGUG1536BA	BUTTON A-1	2	
34	QGUG1536CA	BUTTON A-2	1	
35	QGUG1536EA	BUTTON A-4	1	
36	QGUG1536FA	BUTTON A-5	1	
37	QGUG1537CA	BUTTON B	1	
38	QGUG1538BA	BUTTON C-1	2	
39	QGUG1538CA	BUTTON C-2	1	
40	QGUG1539AA	BUTTON D	8	
41	QGUG1540BA	BUTTON E	3	
42	QGUG1541AA	BUTTON F	2	
43	QGUG1542AA	BUTTON G	2	
44	QGUG1543BA	BUTTON H	2	
45	QGUG1544AA	BUTTON I	2	
46	QGUG1547BA	BUTTON L	1	
47	QGUG1548AA	BUTTON M	1	
48	QGUG3002BC	DIAL WHEEL	1	
49	QGUG1536DA	BUTTON A-3	1	
50	QGUG1537DA	BUTTON B-1	1	
51	QGUG1538AA	BUTTON C	2	
52	QGUG1538CB	BUTTON C-3	1	
53	QMRG7146AA	BUTTON ORNAMENT O	1	
54	QGUG1549BA	BUTTON N	1	
55	QMRG7147AA	BUTTON ORNAMENT Q	1	
56	QGUG1550AA	BUTTON P	1	
57	QSLG025AA	LCD	1	L5DCDPH00001
58	QMFG1294AA	HINGE FELT	2	
59	QKWG046AA	LCD WINDOW	1	
60	QGUG1551AA	BUTTON R	1	
61	QGUG1552BA	BUTTON S	1	
62	QHDG052AB	SCREW	4	
63	QMGG072AA	CUSHION	8	
64	QMGG072AB	CUSHION	2	
65	QMRG2121AA	WIRING COVER A	1	
66	QMRG2122AA	WIRING COVER B	1	
67	QMRG2127BA	DIFFUSSION SHEET	1	
68	QMRG5297AA	URETHANE FOAM	1	
69	QMRG7145AA	LCD COVER	1	
70	QMRG7148AA	BUTTON LIGHTING CHIP	1	
71	QMRG7149AA	LIGHTING ON/OFF LEVER	1	
72	XTB23+10JFZ	SCREW	2	
73	XTV3+10G-M	SCREW	2	
74	XTV3+14G	SCREW	10	
75	QMEG013AA	EARTH SPRING A	1	
76	QMEG014AA	EARTH SPRING B	1	
77	QMRG2128AA	PROTECT SHEET	1	
78	QMRG5298AA	BUTTON CUSHION A	1	
79	QMRG5299AA	BUTTON CUSHION B	2	
80	SBNG7070C	SLIDE VOL KNOB	2	
81	QGKG0183AA	FRONT ORNAMENT	1	P
81	QGKG0183AB	FRONT ORNAMENT	1	EXCEPT P
82	XTV3+6J	MIDI JACK SCREW	5	
83	XYE3+FJ10	SCREW	1	
84	SBNG4050B	BENDER WHEEL	2	
85	SHGG5010A	TUBE	2	

Ref. No.	Part No.	Part Name & Description	Pcs	Remarks
86	QMFG4076AAK	CUSHION	2	
87	QHQG009AA	NUT	2	
88	SUSG570A	SPRING	1	
89	XYE3+FJ10	SCREW	3	
90	XNS12FZ	NUT	9	
91	QMEG011AA	THERMISTOR SPRING	1	
92	QWZG010AA	THERMISTOR TUBE	1	FAJ
93	XTV3+10C	SCREW	1	
94	XYE3+FJ10	SCREW	3	
95	XNS12FZ	NUT	3	
96	XTW3+10TFZ	MIDI JACK SCREW	6	
97	XTB3+10GFZ	VIDEO OUT(1)	1	
98	QMFG4107AA	CUSHION	1	
99	QMGG029AA	FLOATING RUBBER	4	
100	QAUG033AA	FDD UNIT	1	
101	QMFG4207AA	CUSHION	1	
102	QHDG043AA	SCREW	4	
103	XYN3+F8	SCREW	1	
104	XTT4+20CFZ	SCREW	32	
105	RFKNSXKN7000	SP BOX LID ASS'Y	1	
106	QKUG1052AAZ	SP BOX LID (B)	2	
107	QMRG5277AA	SP LID CUSSION (A)	8	
108	QMRG5278AA	SP LID CUSSION (B)	4	
109	QMRG5279AA	SP LID CUSSION (C)	2	
110	QMRG5280AA	SP LID CUSSION (D)	1	
111	QMRG5284AA	SP LID CUSSION (H)	2	
112	QMRG5285AA	SP LID CUSSION (I)	2	
113	QMRG7141AA	BASS PORT COVER	1	
114	QGPG0164AA	SD PANEL	1	
115	QGKG0184BA	SD CARD LID	1	
116	QGUG1553AA	BUTTON V	1	
117	QMRG5276BA	SD LID CUSSION	2	
118	QMRG7144AA	EDGE PANEL	1	
119	QMBG033AA	SD LID SPRING	1	
120	QHDG064AA	SCREW	5	
121	QHDG065AA	SCREW	1	
122	QWZG011AA	LED TUBE	1	
123	QGPG0167BA	CP LID	1	P
123	QGPG0167BB	CP LID	1	EXCEPT P
130	QMRG5297AA	URETANE FORM	1	
131	QMRG5301AA	ORNAMENT CAP	1	
132	QMRG5302AA	ACOUSTIC MATERIAL	1	
133	QMRG5303AA	CORE HOLDING TAPE	1	
134	QMRG5304AA	CORE HOLDING SHEET	1	
135	QMRG5305AA	URETAN SHEET	1	
136	QMRG5306AA	PEF SHEET	1	
137	QMRG5307AA	URETANE FORM	4	GU GM GT
138	QQLG167AA	VOLT ADJ LABEL	1	
139	QKCG003	CP HING (R)	1	
140	QKCG004	CP HING (L)	1	
141	QKCG005	LCD HING	1	
142	QMRG5243AB	URETANE FORM	4	
143	QMRG5247AB	URETANE FORM	1	
144	QEXGRA01010U	CONNECTION WITH WIRE	1	

Ref. No.	Part No.	Part Name & Description	Pcs	Remarks
201	XYE3+FJ10	SCREW	2	
202	QMWG6009BAK	13KEYS RUBBER SWITCH	1	
203	QMWG6010BA	12KEYS RUBBER SWITCH	4	
204	QMFG4176AAK	CUSHION	1	
205	QMRG2074AAK	HOLDING SHEET	1	
206	QMWG5003CA	AFTER TOUCH SENSOR	1	
207	XTW3+10T	SCREW	37	
208	SHGG9052A	KEY GUIDE RUBBER	61	
209	QMFG1120CA	FELT	1	
210	STBG1101B	WHITE KEY(C F)	10	
211	STBG1111B	WHITE KEY(D)	5	
212	STBG1121B	WHITE KEY(E B)	10	
213	STBG1131B	WHITE KEY(G)	5	
214	STBG1141B	WHITE KEY(A)	5	
215	STBG1151B	WHITE KEY(CC)	1	
216	STBG2071AK	BLACK KEY	25	
A1	QQFGKN7000AA	FAN BAG	1	P
A1	QQFGKN7000BA	FAN BAG	1	PC
A1	QQFGKN7000CA	FAN BAG	1	EX
A1	QQFGKN7000DA	FAN BAG	1	EQ
A1	QQFGKN7000EA	FAN BAG	1	EB
A1	QQFGKN7000FA	FAN BAG	1	EG
A1	QQFGKN7000GA	FAN BAG	1	EF
A1	QQFGKN7000HA	FAN BAG	1	EH
A1	QQFGKN7000JA	FAN BAG	1	EV
A1	QQFGKN7000KA	FAN BAG	1	GU GM GH GT
A1	QQFGKN7000LA	FAN BAG	1	GN
A1-1	QQTG0671A	INSTRUCTION MANUAL	1	P <IA>
A1-1	QQTG0671A	INSTRUCTION MANUAL	1	PC<IA>
A1-1	QQTG0671A	INSTRUCTION MANUAL	1	EX<IA>
A1-1	QQTG0671A	INSTRUCTION MANUAL	1	GN<IA>
A1-1	QQTG0671A	INSTRUCTION MANUAL	1	GM<IA>
A1-1	QQTG0671A	INSTRUCTION MANUAL	1	GH<IA>
A1-1	QQTG0671A	INSTRUCTION MANUAL	1	GU<IA>
A1-1	QQTG0671A	INSTRUCTION MANUAL	1	GT<IA>
A1-1	QQTG0671A	INSTRUCTION MANUAL	1	EB<IA>
A1-1	QQTG0672A	INSTRUCTION MANUAL	1	PC<IB>
A1-1	QQTG0672A	INSTRUCTION MANUAL	1	EG<IB>
A1-1	QQTG0672A	INSTRUCTION MANUAL	1	EV<IB>
A1-1	QQTG0672A	INSTRUCTION MANUAL	1	EF<IB>
A1-1	QQTG0673A	INSTRUCTION MANUAL	1	EQ<IC>
A1-1	QQTG0673A	INSTRUCTION MANUAL	1	EG<IC>
A1-1	QQTG0673A	INSTRUCTION MANUAL	1	EV<IC>
A1-1	QQTG0674A	INSTRUCTION MANUAL	1	EX<ID>
A1-1	QQTG0675A	INSTRUCTION MANUAL	1	EX<IE>
A1-1	QQTG0676A	INSTRUCTION MANUAL	1	EH<IF>
A1-1	QQTG0676A	INSTRUCTION MANUAL	1	EV<IF>
A1-1	QQTG0677A	INSTRUCTION MANUAL	1	EG<IG>
A1-2	QQCG0428A	REFERENCE GUIDE(ENGLISH)	1	
A1-3	QQTG0678A	INSTALL MANUAL	1	
A2	QAQG2043AA	PACKAGED FD	1	
A3	K2CB2CB00006	AC CORD	1	⚠ P PC
A3	QJAG027AB	AC CORD	1	⚠ EX EQ EG EF

Ref. No.	Part No.	Part Name & Description	Pcs	Remarks
A3	QJAG027AB	AC CORD	1	⚠ EH EV GU GM GT
A3	QJAG028AB	AC CORD	1	⚠ EB GH
A3	RJA0035-2X	AC CORD	1	⚠ GN
A4	QFVG2044A	PACKAGED CD-ROM	1	
A5	K2DA42E00001	ATTACHMENT PLUG	1	⚠ GM GU GT
P1	QPGG0522AA	CARTON BOX	1	
PCB1	SXPG238611	MAIN PCB	1	<RTL>
PCB2	SXPG232411A	MKB1 PCB	1	<RTL>
PCB3	SXPG232411B	MKB2 PCB	1	<RTL>
PCB4	SXPG232511	MKB3 PCB	1	<RTL>
PCB5	SXPG232941	ACP PCB	1	<RTL>EX EB EQ EG
PCB5	SXPG232941	ACP PCB	1	<RTL>EF EH EV GN GH
PCB5	SXPG232951	ACP PCB	1	<RTL>P PC
PCB5	SXPG232961	ACP PCB	1	<RTL>GM GU GT
PCB6	SXPG238711A	FAJ PCB	1	<RTL>
PCB7	SXPG238711B	JACK PCB	1	<RTL>
PCB8	SXPG238811B	INV PCB	1	<RTL>
PCB9	SXPG238811A	ASUB PCB	1	<RTL>
PCB10	SXPG238811C	SD PCB	1	<RTL>
PCB11	SXPG238911A	CPL PCB	1	<RTL>
PCB12	SXPG238911B	CPC PCB	1	<RTL>
PCB13	SXPG239011A	CPR PCB	1	<RTL>
PCB14	SXPG239011B	ROT PCB	1	<RTL>
PCB15	SXPG239011E	BEND PCB	1	<RTL>
PCB16	SXPG239011D	HP PCB	1	<RTL>
PCB17	SXPG239011C	SDSW PCB	1	<RTL>
<MAIN P.C.B.>				
PCB1	SXPG238611	MAIN PCB	1	<RTL>
C1	ECJ1VB1C104K	0.1U	1	[SPC]
C2	ECJ1VB1C104K	0.1U	1	[SPC]
C3	ECJ1VB1C104K	0.1U	1	[SPC]
C4	ECJ1VB1A224K	0.22U	1	[SPC]
C5	ECJ1VB1C104K	0.1U	1	[SPC]
C6	ECJ1VB1C104K	0.1U	1	[SPC]
C7	ECJ1VB1C104K	0.1U	1	[SPC]
C8	ECJ1VB1C104K	0.1U	1	[SPC]
C9	ECJ1VB1C104K	0.1U	1	[SPC]
C10	ECJ1VB1C104K	0.1U	1	[SPC]
C11	ECJ1VB1C104K	0.1U	1	[SPC]
C12	ECJ1VB1C104K	0.1U	1	[SPC]
C13	ECJ1VB1C104K	0.1U	1	[SPC]
C14	ECJ1VB1H103K	0.01U	1	[SPC]
C15-18	ECJ1VB1C104K	0.1U	4	[SPC]
C19	ECJ1VG1H150J	15P	1	[SPC]
C20	ECJ1VB1C104K	0.1U	1	[SPC]
C21	ECJ1VG1H150J	15P	1	[SPC]
C22-26	ECJ1VB1C104K	0.1U	5	[SPC]
C28,29	ECJ1VB1C104K	0.1U	2	[SPC]
C30	ECJ1VG1H471J	470P	1	[SPC]
C31-43	ECJ1VB1C104K	0.1U	13	[SPC]
C44-47	ECJ1VG1H101J	100P	4	[SPC]

Ref. No.	Part No.	Part Name & Description	Pcs	Remarks
C49	ECJ1VB1C104K	0.1U	1	[SPC]
C101,02	ECJ1VB1C104K	0.1U	2	[SPC]
C108	ECJ1VB1C104K	0.1U	1	[SPC]
C110	ECJ1VB1C104K	0.1U	1	[SPC]
C111	ECJ1VG1H470J	47P	1	[SPC]
C112	ECJ1VG1H100D	10P	1	[SPC]
C113	ECJ1VB1C104K	0.1U	1	[SPC]
C114-19	ECJ1VG1H470J	47P	6	[SPC]
C120,21	ECJ1VG1H100D	10P	2	[SPC]
C122	ECJ1VG1H470J	47P	1	[SPC]
C123,24	ECJ1VG1H100D	10P	2	[SPC]
C125	ECJ1VB1C104K	0.1U	1	[SPC]
C126-28	ECJ1VG1H100D	10P	3	[SPC]
C129	EEVHB0J470R	6V 47U	1	[SPC]
C130	ECJ1VG1H100D	10P	1	[SPC]
C131	ECJ1VG1H101J	100P	1	[SPC]
C132	ECJ1VG1H470J	47P	1	[SPC]
C133	ECJ1VG1H100D	10P	1	[SPC]
C134-37	ECJ1VB1C104K	0.1U	4	[SPC]
C138	ECJ1VG1H221J	220P	1	[SPC]
C139-44	ECJ1VB1C104K	0.1U	6	[SPC]
C145,46	ECJ1VG1H470J	47P	2	[SPC]
C147-49	ECJ1VB1C104K	0.1U	3	[SPC]
C150	ECJ1VG1H471J	470P	1	[SPC]
C151	ECJ1VB1H103K	0.01U	1	[SPC]
C152-55	ECJ1VB1C104K	0.1U	4	[SPC]
C156	ECJ1VG1H101J	100P	1	[SPC]
C157	ECJ1VB1C104K	0.1U	1	[SPC]
C158-65	ECJ1VG1H101J	100P	8	[SPC]
C166	ECJ1VB1C104K	0.1U	1	[SPC]
C201	ECJ1VG1H100D	10P	1	[SPC]
C202	ECJ1VG1H221J	220P	1	[SPC]
C203	ECJ1VG1H100D	10P	1	[SPC]
C204-07	ECJ1VB1C104K	0.1U	4	[SPC]
C208-12	ECJ1VG1H101J	100P	5	[SPC]
C213-28	ECJ1VB1C104K	0.1U	16	[SPC]
C229	ECJ1VG1H221J	220P	1	[SPC]
C231-49	ECJ1VB1C104K	0.1U	19	[SPC]
C301-03	ECJ1VB1C104K	0.1U	3	[SPC]
C304	EEVHB0J101P	6V 100U	1	[SPC]
C305	EEVHB1C100R	16V 10U	1	[SPC]
C306-29	ECJ1VB1C104K	0.1U	24	[SPC]
C330	EEVHB0J101P	6V 100U	1	[SPC]
C331,32	ECJ1VB1C104K	0.1U	2	[SPC]
C333,34	ECJ1VG1H471J	470P	2	[SPC]
C335	EEVHB0J470R	6V 47U	1	[SPC]
C336-40	ECJ1VB1C104K	0.1U	5	[SPC]
C341	EEVHB1C100R	16V 10U	1	[SPC]
C342	ECJ1VB1C104K	0.1U	1	[SPC]
C343,44	EEVHB1C100R	16V 10U	2	[SPC]
C345	ECJ1VG1H102J	0.001U	1	[SPC]
C346	EEVHB1C100R	16V 10U	1	[SPC]
C347-51	ECJ1VB1C104K	0.1U	5	[SPC]
C354,55	ECJ1VB1A224K	0.22U	2	[SPC]

Ref. No.	Part No.	Part Name & Description	Pcs	Remarks
C358	ECJ1VB1H472K	0.0047U	1	[SPC]
C359,60	ECJ1VB1C104K	0.1U	2	[SPC]
C363	ECJ1VB1C104K	0.1U	1	[SPC]
C364,65	ECJ1VG1H681J	680P	2	[SPC]
C366,67	ECJ1VG1H102J	0.001U	2	[SPC]
C368,69	ECJ1VB1C104K	0.1U	2	[SPC]
C370,71	ECJ1VG1H102J	0.001U	2	[SPC]
C372-74	ECJ1VB1C104K	0.1U	3	[SPC]
C375,76	ECJ1VG1H102J	0.001U	2	[SPC]
C377-80	ECJ1VG1H221J	220P	4	[SPC]
C381,82	ECJ1VG1H151J	150P	2	[SPC]
C383-85	ECJ1VB1C104K	0.1U	3	[SPC]
C401	ECJ1VG1H220J	22P	1	[SPC]
C403	ECJ1VG1H030C	3P	1	[SPC]
C405	ECJ1VG1H030C	3P	1	[SPC]
C406,07	ECJ1VB1C104K	0.1U	2	[SPC]
C408	EEVHB0G101	4V 100U	1	[SPC]
C409	EEVHB1C100R	16V 10U	1	[SPC]
C410-33	ECJ1VB1C104K	0.1U	24	[SPC]
C434,35	EEVHB1C100R	16V 10U	2	[SPC]
C436,37	ECJ1VB1C104K	0.1U	2	[SPC]
C438	ECJ1VG1H681J	680P	1	[SPC]
C439,40	EEVHB1H1R0R	50V 1U	2	[SPC]
C441,42	ECJ1VG1H102J	0.001U	2	[SPC]
C443,44	ECJ1VG1H151J	150P	2	[SPC]
C445,46	EEVHB1H1R0R	50V 1U	2	[SPC]
C447	ECJ1VB1C104K	0.1U	1	[SPC]
C448,49	ECJ1VG1H471J	470P	2	[SPC]
C450-54	ECJ1VB1C104K	0.1U	5	[SPC]
C455	EEVHB1C100R	16V 10U	1	[SPC]
C456-58	ECJ1VB1C104K	0.1U	3	[SPC]
C459	ECJ1VG1H330J	33P	1	[SPC]
C460	EEVHB1H2R2R	50V 2.2U	1	[SPC]
C461,62	EEVHP1H1R0R	50V 1U	2	[SPC]
C464	ECJ1VG1H680J	68P	1	[SPC]
C465	ECJ1VB1C104K	0.1U	1	[SPC]
C466	ECJ1VG1H150J	15P	1	[SPC]
C467	ECJ1VG1H102J	0.001U	1	[SPC]
C468	ECJ1VB1C104K	0.1U	1	[SPC]
C469	ECJ1VG1H102J	0.001U	1	[SPC]
C470,71	EEVHB1H1R0R	50V 1U	2	[SPC]
C472-75	ECJ1VB1C104K	0.1U	4	[SPC]
C476	ECJ1VB1A224K	0.22U	1	[SPC]
C477-84	ECJ1VG1H102J	0.001U	8	[SPC]
CN101	K1KA15A00116	CONNECTOR	1	[SPC]
CN102	K1KA14A00197	CONNECTOR	1	[SPC]
CN103	K1KA08A00293	CONNECTOR	1	[SPC]
CN104	K1KA05A00257	CONNECTOR	1	[SPC]
CN105	K1MN20A00045	CONNECTOR	1	[SPC]
CN106	TJSF43711	CONNECTOR	1	K1KA11B00040[SPC]
CN201	K1KA16A00172	CONNECTOR	1	[SPC]
CN202,03	QJTG02840AA	CONNECTOR	2	K1MM40A00002[SPC]
CN204	K1KA80A00100	CONNECTOR	1	[SPC]
CN205	QJTG02840AA	CONNECTOR	1	K1MM40A00002[SPC]

Ref. No.	Part No.	Part Name & Description	Pcs	Remarks
CN206	K1KA80A00100	CONNECTOR	1	[SPC]
CN207	QJTG02840AA	CONNECTOR	1	K1MM40A00002[SPC]
CN208,09	K1KA80A00100	CONNECTOR	2	[SPC]
CN301	K1KA12A00227	CONNECTOR	1	[SPC]
CN302	TJSF34113A	CONNECTOR	1	K1KA13A00049[SPC]
CN401	K1KA11A00102	CONNECTOR	1	[SPC]
CN402	K1KA10A00317	CONNECTOR	1	[SPC]
D1	MA2J11100L	DIODE	1	[SPC]
D2	MA2J11100L	DIODE	1	[SPC]
D3	MA2J11100L	DIODE	1	[SPC]
D101	MA2J11100L	DIODE	1	[SPC]
D102	MA2J11100L	DIODE	1	[SPC]
D103	MA2J11100L	DIODE	1	[SPC]
D104	MA2J11100L	DIODE	1	[SPC]
D201-08	MA2J11100L	DIODE	8	[SPC]
D301	MA2J11100L	DIODE	1	[SPC]
D302	MA3X152D0L	DIODE	1	[SPC]
D303	MA2J11100L	DIODE	1	[SPC]
D304,05	MA3X152E0L	DIODE	2	[SPC]
D306	MA8039H	DIODE	1	MAZ80390H[SPC]
D401	MA2Z30400L	DIODE	1	[SPC]
IC1	TC74VHC138F	IC	1	C0JBAN000074[SPC]
IC2	TC74VHC139F	IC	1	C0JBAN000176[SPC]
IC3	TC74VHC139F	IC	1	C0JBAN000176[SPC]
IC4	MN103002A	32 BIT MICRO CONTROLLER	1	[SPC]
IC5	TC7SH02FU	IC	1	C0JBAD000071[SPC]
IC6	C0ZBZ0000667	SPECTRAM SPREAD	1	[SPC]
IC7	C0JBAE000140	2 INPUT OR GATE	1	[SPC]
IC8	TC7W08FU	IC	1	C0JBAA000207[SPC]
IC9	TC74VHC08F	IC	1	C0JBAA000090[SPC]
IC10	C0JBAA000102	INVERTER AND GATE	1	[SPC]
IC11	C0JBAF000162	IC	1	[SPC]
IC12,13	C3ABMG000166	16M BIT PYNAMIC RAM	2	[SPC]
IC14,15	C3BBHG000048	1MFASTSRAM	2	[SPC]
IC16,17	RFKFXKN7000	FLASH MEMORY	1	[SPC]
IC18	C3CBND000046	IC	1	[SPC]
IC19	C3CBMD000098	IC	1	[SPC]
IC21	C3FBMD000050	IC	1	[SPC]
IC22	TC7W08FU	IC	1	C0JBAA000207[SPC]
IC23	C3BBJG000011	IC	1	[SPC]
IC25	JVAHC174AFEL	IC	1	C0JBAF000303[SPC]
IC26	TC7SH32FUTL	IC	1	C0JBAE000093[SPC]
IC101	C0JBAB000164	IC	1	[SPC]
IC102	C0JBAZ000529	IC	1	[SPC]
IC103	C1DB00000607	FDC	1	[SPC]
IC104	C0HBA0000117	LCD CONTROLLER	1	[SPC]
IC105	TC7S14F	IC	1	C0JBAZ000514[SPC]
IC106	C0JBAZ000853	IC	1	[SPC]
IC201	C1BB00000709	TONE GENERATOR	1	[SPC]
IC202	TC74VHC139F	IC	1	C0JBAN000176[SPC]
IC203	C3CBQD000002	IC	1	[SPC]
IC204	C3CBQD000001	IC	1	[SPC]
IC205	C1BB00000709	TONE GENERATOR	1	[SPC]
IC206	TC74VHC139F	IC	1	C0JBAN000176[SPC]

Ref. No.	Part No.	Part Name & Description	Pcs	Remarks
IC207	C3CBQD000004	IC	1	[SPC]
IC208	C3CBQD000003	IC	1	[SPC]
IC209	C0JBAE000140	2 INPUT OR GATE	1	[SPC]
IC301	TC7SH32FUTL	IC	1	C0JBAE000093[SPC]
IC302	TC74VHC245F	IC	1	C0JBAZ000505[SPC]
IC303	TC74VHC574F	IC	1	C0JBAF000183[SPC]
IC304	TC74VHC245F	IC	1	C0JBAZ000505[SPC]
IC305	C0JBAZ000874	IC	1	[SPC]
IC306	S21065LKS240	IC	1	C2HBBY000012[SPC]
IC307,08	KM416S1120DT	IC	2	C3ABMG000039[SPC]
IC309	PCM1800E-T1	IC	1	C0FBAJ000004[SPC]
IC310	PCM69BU-T1	IC	1	C0FBBZ000012[SPC]
IC311	C0FBBK000025	IC	1	[SPC]
IC312-16	M5218AFPE3	IC	5	C0ABBB000163[SPC]
IC318	MN1382CTX	IC	1	MN1382CP[SPC]
IC401	MN102H60KTA	IC	1	[SPC]
IC402	MN67737DB1	IC	1	[SPC]
IC403	S29L331AFSTB	IC	1	C3EBEG000021[SPC]
IC404	C0JBAR000155	IC	1	[SPC]
IC405	TC7W00FUTL	IC	1	C0JBAC000113[SPC]
IC406	PCM1716ET2	IC	1	C0FBBK000009[SPC]
IC407	C2CBGF000150	USB MICRO CONTROLLER	1	[SPC]
IC408	C2BBGE000618	USB AUDIO	1	[SPC]
IC409	M5218AFPE3	IC	1	C0ABBB000163[SPC]
IC410	PCM1800E-T1	IC	1	C0FBAJ000004[SPC]
IC411	C0JBAZ000529	IC	1	[SPC]
IC412	C0JBAS000075	IC	1	[SPC]
IC413	C0JBAF000162	IC	1	[SPC]
IC414	C3FBKD000162	IC	1	[SPC]
JP1	ERJ3GEY0R00V	0	1	[SPC]
JP3	ERJ3GEY0R00V	0	1	[SPC]
JP7	ERJ3GEY0R00V	0	1	[SPC]
JP10	ERJ3GEY0R00V	0	1	[SPC]
JP12,13	ERJ3GEY0R00V	0	2	[SPC]
JP402	ERJ3GEY0R00V	0	1	[SPC]
L101	J0JBC0000023	COIL	1	[SPC]
L103	J0JBC0000023	COIL	1	[SPC]
L401	G1C6R8J00003	COIL	1	[SPC]
Q1	2SB0709ARL	TRANSISTOR	1	[SPC]
Q2	2SD0601AQL	TRANSISTOR	1	[SPC]
Q3	UN5216	TRANSISTOR	1	UNR521600L[SPC]
Q101	2SD0601AQL	TRANSISTOR	1	[SPC]
Q102,03	UN511NTX	TRANSISTOR	2	UNR511N00L[SPC]
Q104	UN5216	TRANSISTOR	1	UNR521600L[SPC]
Q105,06	2SB0709ARL	TRANSISTOR	2	[SPC]
Q302	2SB0709ARL	TRANSISTOR	1	[SPC]
Q303,04	2SD0601AQL	TRANSISTOR	2	[SPC]
Q305	2SB970-QRSTX	TRANSISTOR	1	2SB09700WL[SPC]
Q306	2SD0601AQL	TRANSISTOR	1	[SPC]
Q307,08	B1CFDC000004	TRANSISTOR	2	[SPC]
Q309	2SD0601AQL	TRANSISTOR	1	[SPC]
Q401	2SD0601AQL	TRANSISTOR	1	[SPC]
Q402	2SB970-QRSTX	TRANSISTOR	1	2SB09700WL[SPC]
R1	ERJ3GEYJ101V	100	1	[SPC]

Ref. No.	Part No.	Part Name & Description	Pcs	Remarks
R2	ERJ3GEYJ102V	1K	1	[SPC]
R3	ERJ3GEYJ472V	4.7K	1	[SPC]
R4	ERJ3GEYJ102V	1K	1	[SPC]
R5,R6	ERJ3GEYJ104V	100K	2	D0GB104JA002[SPC]
R7-10	ERJ3GEYJ472V	4.7K	4	[SPC]
R11,12	ERJ3GEYJ470V	47	2	[SPC]
R13	ERJ3GEYJ472V	4.7K	1	[SPC]
R14	ERJ3GEYJ103V	10K	1	D0GB103JA002[SPC]
R15-17	ERJ3GEYJ470V	47	3	[SPC]
R18	ERJ3GEYJ103V	10K	1	D0GB103JA002[SPC]
R19-21	ERJ3GEYJ472V	4.7K	3	[SPC]
R22	ERJ3GEYJ103V	10K	1	D0GB103JA002[SPC]
R23	ERJ3GEYJ471V	470	1	[SPC]
R24	ERJ3GEYJ103V	10K	1	D0GB103JA002[SPC]
R25,26	ERJ3GEYJ472V	4.7K	2	[SPC]
R27	ERJ3GEYJ102V	1K	1	[SPC]
R28-31	ERJ3GEYJ472V	4.7K	4	[SPC]
R32	ERJ3GEYJ101V	100	1	[SPC]
R33	ERJ3GEY0R00V	0	1	[SPC]
R34	ERJ3GEYJ470V	47	1	[SPC]
R35	ERJ3GEYJ103V	10K	1	D0GB103JA002[SPC]
R36	ERJ3GEYJ470V	47	1	[SPC]
R37	ERJ3GEYJ331V	330	1	[SPC]
R38	ERJ3GEYJ472V	4.7K	1	[SPC]
R40	ERJ3GEY0R00V	0	1	[SPC]
R42	ERJ3GEY0R00V	0	1	[SPC]
R101-05	ERJ3GEYJ470V	47	5	[SPC]
R106	ERJ3GEYJ102V	1K	1	[SPC]
R107	ERJ3GEYJ101V	100	1	[SPC]
R108	ERJ3GEYJ105V	1M	1	[SPC]
R109	ERJ3GEYJ471V	470	1	[SPC]
R110	ERJ3GEYJ105V	1M	1	[SPC]
R111	ERJ3GEYJ101V	100	1	[SPC]
R112	ERJ3GEYJ470V	47	1	[SPC]
R113	ERJ3GEYJ101V	100	1	[SPC]
R114	ERJ3GEYJ151V	150	1	[SPC]
R115	ERJ3GEYJ101V	100	1	[SPC]
R116,17	ERJ3GEYJ105V	1M	2	[SPC]
R118	ERJ3GEYJ221V	220	1	[SPC]
R119	ERJ3GEYJ102V	1K	1	[SPC]
R120	ERJ3GEYJ101V	100	1	[SPC]
R121	ERJ3GEYJ152V	1.5K	1	[SPC]
R122,23	ERJ3GEYJ101V	100	2	[SPC]
R124-31	ERJ3GEYJ103V	10K	8	D0GB103JA002[SPC]
R132,33	ERJ3GEYJ470V	47	2	[SPC]
R134,35	ERJ3GEYJ103V	10K	2	D0GB103JA002[SPC]
R136	ERJ3GEYJ101V	100	1	[SPC]
R137,38	ERJ3GEYJ472V	4.7K	2	[SPC]
R139	ERJ3GEYJ470V	47	1	[SPC]
R140-42	ERJ3GEYJ472V	4.7K	3	[SPC]
R146	ERJ3GEYJ472V	4.7K	1	[SPC]
R147	ERJ3GEYJ103V	10K	1	D0GB103JA002[SPC]
R148	ERJ3GEY0R00V	0	1	[SPC]
R150,51	ERJ3GEYJ470V	47	2	[SPC]

Ref. No.	Part No.	Part Name & Description	Pcs	Remarks
R152	ERJ3GEYJ472V	4.7K	1	[SPC]
R201	ERJ3GEYJ105V	1M	1	[SPC]
R202,03	ERJ3GEYJ470V	47	2	[SPC]
R205-17	ERJ3GEYJ470V	47	13	[SPC]
R218	ERJ3GEY0R00V	0	1	[SPC]
R219-32	ERJ3GEYJ470V	47	14	[SPC]
R234-58	ERJ3GEYJ470V	47	25	[SPC]
R301,02	ERJ3GEYJ472V	4.7K	2	[SPC]
R303	ERJ3GEYJ101V	100	1	[SPC]
R304	ERJ3GEYJ103V	10K	1	D0GB103JA002[SPC]
R305,06	ERJ3GEYJ333V	33K	2	D0GB333JA002[SPC]
R308	ERJ3GEYJ105V	1M	1	[SPC]
R309	ERJ3GEYJ104V	100K	1	D0GB104JA002[SPC]
R310	ERJ3GEYJ473V	47K	1	D0GB473JA002[SPC]
R311	ERJ3GEYJ103V	10K	1	D0GB103JA002[SPC]
R313	ERJ3GEYJ470V	47	1	[SPC]
R314-16	ERJ3GEYJ101V	100	3	[SPC]
R317	ERJ3GEYJ153V	15K	1	[SPC]
R318	ERJ3GEYJ471V	470	1	[SPC]
R319,20	ERJ3GEYJ682V	6.8K	2	D0GB682JA002[SPC]
R321-24	ERJ3GEYJ681V	680	4	D0GB681JA002[SPC]
R325,26	ERJ3GEYJ682V	6.8K	2	D0GB682JA002[SPC]
R327	ERJ3GEYJ471V	470	1	[SPC]
R328-37	ERJ3GEYJ682V	6.8K	10	D0GB682JA002[SPC]
R338,39	ERJ3GEYJ103V	10K	2	D0GB103JA002[SPC]
R340	ERJ3GEYJ682V	6.8K	1	D0GB682JA002[SPC]
R341	ERJ3GEYJ153V	15K	1	[SPC]
R342,43	ERJ3GEYJ103V	10K	2	D0GB103JA002[SPC]
R344	ERJ3GEYJ682V	6.8K	1	D0GB682JA002[SPC]
R345	ERJ3GEYJ153V	15K	1	[SPC]
R346,47	ERJ3GEYJ473V	47K	2	D0GB473JA002[SPC]
R351	ERJ3GEYJ471V	470	1	[SPC]
R352,53	ERJ3GEYJ101V	100	2	[SPC]
R354	ERJ3GEYJ471V	470	1	[SPC]
R355	ERJ3GEYJ472V	4.7K	1	[SPC]
R356	ERJ3GEYJ562V	5.6K	1	D0GB562JA002[SPC]
R357	ERJ3GEYJ102V	1K	1	[SPC]
R358	ERJ3GEYJ473V	47K	1	D0GB473JA002[SPC]
R359,60	ERJ3GEYJ472V	4.7K	2	[SPC]
R361,62	ERJ3GEYJ470V	47	2	[SPC]
R401-03	ERJ3GEYJ394V	390K	3	[SPC]
R404	ERJ3GEYJ104V	100K	1	D0GB104JA002[SPC]
R405,06	ERJ3GEY0R00V	0	2	[SPC]
R407	ERJ3GEYJ103V	10K	1	D0GB103JA002[SPC]
R408,09	ERJ3GEYJ220V	22	2	[SPC]
R410,11	ERJ3GEYJ103V	10K	2	D0GB103JA002[SPC]
R412	ERJ3GEYJ220V	22	1	[SPC]
R413	ERJ3GEYJ221V	220	1	[SPC]
R414,15	ERJ3GEYJ471V	470	2	[SPC]
R416	ERJ3GEYJ105V	1M	1	[SPC]
R417	ERJ3GEYJ221V	220	1	[SPC]
R420-23	ERJ3GEYJ220V	22	4	[SPC]
R424,25	ERJ3GEYJ104V	100K	2	D0GB104JA002[SPC]
R426	ERJ3GEYJ220V	22	1	[SPC]

Ref. No.	Part No.	Part Name & Description	Pcs	Remarks
R427	ERJ3GEYJ394V	390K	1	[SPC]
R428	ERJ3GEYJ220V	22	1	[SPC]
R429	ERJ3GEYJ101V	100	1	[SPC]
R430-32	ERJ3GEYJ472V	4.7K	3	[SPC]
R433	ERJ3GEYJ101V	100	1	[SPC]
R434-37	ERJ3GEY0R00V	0	4	[SPC]
R438	ERJ3GEYJ102V	1K	1	[SPC]
R439	ERJ3GEYJ472V	4.7K	1	[SPC]
R440,41	ERJ3GEYJ682V	6.8K	2	D0GB682JA002[SPC]
R442	ERJ3GEYJ103V	10K	1	D0GB103JA002[SPC]
R443,44	ERJ3GEYJ333V	33K	2	D0GB333JA002[SPC]
R445,46	ERJ3GEY0R00V	0	2	[SPC]
R447,48	ERJ3GEYJ330V	33	2	D0GB330JA002[SPC]
R449	ERJ3GEYJ471V	470	1	[SPC]
R450	ERJ3GEY0R00V	0	1	[SPC]
R451	ERJ3GEYJ472V	4.7K	1	[SPC]
R452	ERJ3GEYJ152V	1.5K	1	[SPC]
R453,54	ERJ3GEYJ102V	1K	2	[SPC]
R455,56	ERJ3GEYJ822V	8.2K	2	D0GB822JA002[SPC]
R458	ERJ3GEYJ473V	47K	1	D0GB473JA002[SPC]
R459	ECJ1VG1H102J	0.001U	1	[SPC]
R460,61	ERJ3GEYJ472V	4.7K	2	[SPC]
R462	ERJ3GEYJ470V	47	1	[SPC]
R463	ERJ3GEYJ471V	470	1	[SPC]
R464	ERJ3GEYJ220V	22	1	[SPC]
R465,66	ERJ3GEYJ103V	10K	2	D0GB103JA002[SPC]
R467	ERJ3GEYJ471V	470	1	[SPC]
R469	ERJ3GEYJ394V	390K	1	[SPC]
R470	ERJ3GEYJ224V	220K	1	D0GB224JA002[SPC]
X1	VSX0917	OSCILATOR	1	H0J160500026[SPC]
X102	H0J177500018	17.73MHZ OSCILATOR	1	[SPC]
X103	H0J240500016	24MHZ OSCILATOR	1	[SPC]
X104	H0J143500039	14.32MHZ OSCILATOR	1	[SPC]
X105	H1A5005B0014	50MHZ OSCILATOR	1	[SPC]
X201	H0J169300002	OSCILATOR	1	[SPC]
X301	H1A3005B0005	OSCILATOR	1	[SPC]
X401	H0J327200034	OSCILATOR	1	[SPC]
X402	H2D225500001	OSCILATOR	1	[SPC]
Z1,Z2	EXBV8V472JV	4.7K X 4	2	[SPC]
Z3	EXBV8V470JV	47 X 4	1	[SPC]
Z6-13	EXBV8V472JV	4.7K X 4	8	[SPC]
Z14	EXBV8V101JV	100 X 4	1	[SPC]
Z15-24	EXBV8V472JV	4.7K X 4	10	[SPC]
Z101,02	EXBV8V470JV	47 X 4	2	[SPC]
Z103	EXBV8V102JV	1K X 4	1	[SPC]
Z104	EXBV8V101JV	100 X 4	1	[SPC]
Z105,06	EXBV8V221JV	220 X 4	2	[SPC]
Z107,08	EXBV8V101JV	100 X 4	2	[SPC]
Z109-12	EXBV8V470JV	47 X 4	4	[SPC]
Z114	EXBV8V470JV	47 X 4	1	[SPC]
Z115-17	EXBV8V472JV	4.7K X 4	3	[SPC]
Z201,02	EXBV8V223JV	22K X 4	2	[SPC]
Z203-05	EXBV8V470JV	47 X 4	3	[SPC]
Z206,07	EXBV8V472JV	4.7K X 4	2	[SPC]

Ref. No.	Part No.	Part Name & Description	Pcs	Remarks
Z208-10	EXBV8V470JV	47 X 4	3	[SPC]
Z211	EXBV8V101JV	100 X 4	1	[SPC]
Z212-46	EXBV8V470JV	47 X 4	35	[SPC]
Z301-03	EXBV8V101JV	100 X 4	3	[SPC]
Z304-07	EXBV8V221JV	220 X 4	4	[SPC]
Z308	EXBV8V472JV	4.7K X 4	1	[SPC]
Z309-12	EXBV8V221JV	220 X 4	4	[SPC]
Z313	EXBV8V472JV	4.7K X 4	1	[SPC]
Z314	EXBV8V470JV	47 X 4	1	[SPC]
Z315,16	EXBV8V101JV	100 X 4	2	[SPC]
Z317,18	EXBV8V472JV	4.7K X 4	2	[SPC]
Z401	EXBV8V470JV	47 X 4	1	[SPC]
Z402	EXBV8V101JV	100 X 4	1	[SPC]
Z403	EXBV8V103J	10K X 4	1	D0GZ103J0001[SPC]
<FAJ P.C.B.>				
PCB6	SXPG238711A	FAJ PCB	1	<RTL>
C501,02	ECEA1HSN010	50V 1U	2	
C503	ECBT1C472KR5	0.0047U	1	F1D1C472A010
C504	ECA0JAK470XH	6V 47U	1	
C505,06	ECA1CAK100XB	16V 10U	2	
C507	QCBG1H473ZFA	0.047U	1	F1E1H473A001
C508	F1D1H470A006	47P	1	
C509,10	QCBG1H473ZFA	0.047U	2	F1E1H473A001
C511	F1D1H221A012	220P	1	
C512	ECEA1HSN010	50V 1U	1	
C513,14	ECQV1H683JZ3	0.068U	2	
C515	ECEA1CKN100B	16V 10U	1	
C516,17	ECQM1H224JZ	0.22U	2	
C518	ECBT1C472KR5	0.0047U	1	F1D1C472A010
C520	QCBG1H473ZFA	0.047U	1	F1E1H473A001
C521,22	ECQB1H223JF3	0.022U	2	
C523	ECBT1C472KR5	0.0047U	1	F1D1C472A010
C524,25	ECBT1H150JC5	15P	2	
C526	ECEA1CKN100B	16V 10U	1	
C527	ECQV1H104JZ	0.1U	1	
C528	ECQV1H154JZ3	0.15U	1	
C529	ECQV1H104JZ	0.1U	1	
C530	ECQV1H154JZ3	0.15U	1	
C531,32	QCBG1H473ZFA	0.047U	2	F1E1H473A001
C533	ECEA1CKN100B	16V 10U	1	
C534	ECBT1C472KR5	0.0047U	1	F1D1C472A010
C535	ECQV1H683JZ3	0.068U	1	
C536	ECQV1H154JZ3	0.15U	1	
C537	ECQV1H683JZ3	0.068U	1	
C538	ECQV1H154JZ3	0.15U	1	
C539	QCBG1H473ZFA	0.047U	1	F1E1H473A001
C540	ECBT1C472KR5	0.0047U	1	F1D1C472A010
C541	ECEA1CKN100B	16V 10U	1	
C542	ECQB1H333JF3	0.033U	1	
C543	ECQB1H153JF3	0.015U	1	
C544	ECQB1H333JF3	0.033U	1	
C545	ECQB1H153JF3	0.015U	1	

Ref. No.	Part No.	Part Name & Description	Pcs	Remarks
C546,47	F1D1H101A012	100P	2	
C548,49	ECEA1CKN100B	16V 10U	2	
C550-53	ECQB1H223JF3	0.022U	4	
C554,55	QCBG1H473ZFA	0.047U	2	F1E1H473A001
C556,57	F1D1H470A006	47P	2	
C558,59	QCBG1H473ZFA	0.047U	2	F1E1H473A001
C560,61	ECEA1CKN100B	16V 10U	2	
C562,63	ECBT1H150JC5	15P	2	
C564	ECBT1H220JC5	22P	1	
C565,66	QCBG1H473ZFA	0.047U	2	F1E1H473A001
C567	ECBT1H220JC5	22P	1	
C568,69	QCBG1H473ZFA	0.047U	2	F1E1H473A001
C570,71	ECQB1H473JF3	0.047U	2	
C572	ECBT1C472KR5	0.0047U	1	F1D1C472A010
C573-75	ECQB1H473JF3	0.047U	3	
C576	ECBT1C472KR5	0.0047U	1	F1D1C472A010
C577	ECQB1H223JF3	0.022U	1	
C578,79	ECQV1H104JZ	0.1U	2	
C580	ECEA1HSN010	50V 1U	1	
C581,82	ECBT1C472KR5	0.0047U	2	F1D1C472A010
C584-86	F1D1H470A006	47P	3	
C587-89	F1D1H221A012	220P	3	
C590,91	ECEA1CKN100B	16V 10U	2	
C592,93	QCBG1H473ZFA	0.047U	2	F1E1H473A001
C594,95	F1D1H470A006	47P	2	
C596	QCBG1H473ZFA	0.047U	1	F1E1H473A001
C597,98	ECBT1C472KR5	0.0047U	2	F1D1C472A010
C599,00	ECA1EM102	25V 1000P	2	
C601-05	ECQV1H105JZ3	1U	5	
C606-15	F1D1H101A012	100P	10	
C616	QCBG1H473ZFA	0.047U	1	F1E1H473A001
C618	QCBG1H473ZFA	0.047U	1	F1E1H473A001
C620	ECA1CAK101XB	16V 100U	1	
C622-26	QCBG1H473ZFA	0.047U	5	F1E1H473A001
C630,31	QCBG1H473ZFA	0.047U	2	F1E1H473A001
C641-44	QCBG1H473ZFA	0.047U	4	F1E1H473A001
C645	ECQE1A104M6	0.1	1	
C646	ECA1EAM101XB	16V 100U	1	
C647	ECA1HAK010XI	50V 1U	1	
C648	ECA1EAM101XB	16V 100U	1	
C649	ECA1CAK100XB	16V 10U	1	
C652-55	ECA1EM472	25V 4700P	4	
C656,57	QCBG1H473ZFA	0.047U	2	F1E1H473A001
C658,59	F1D1H102A012	0.001U	2	
C660,61	QCBG1H473ZFA	0.047U	2	F1E1H473A001
C662,63	ECA0JAM102XB	6V 1000P	2	
C664,65	ECA1CAK101XB	16V 100U	2	
C667,68	EECS5R5V105	5.2V 1F	2	
CN501	SJPG1JS130A	CONNECTOR	1	
CN502	SJPG1JS120A	CONNECTOR	1	
CN503	SJPG1JS130A	CONNECTOR	1	
CN504	SJPG1JS050A	CONNECTOR	1	
CN505,06	QJTG04309AA	CONNECTOR	2	
CN507	SJPG1300A	CONNECTOR	1	

Ref. No.	Part No.	Part Name & Description	Pcs	Remarks
CN508	SJPG1320A	CONNECTOR	1	
CN641	SJPG7JS030A	CONNECTOR	1	
D501-07	RVD1SS133TA	DIODE	7	B0AACK000004
D509 10	AK03WK	DIODE	2	B0JAMD000005
D511	MA4150-M	DIODE	1	MAZ41500M
D512	RVD1SS133TA	DIODE	1	B0AACK000004
D641	MA4082-MTA	DIODE	1	MAZ40820MF
D642	MA4033M	DIODE	1	MAZ40330M
D643	MAZ40560MF	DIODE	1	
D644,45	ERA1502V5	DIODE	2	B0EAKM000061
D646-49	SVDS3V40	DIODE	4	B0EAKM000066
D650,51	MAZ40560MF	DIODE	2	
D654,55	AK03WK	DIODE	2	B0JAMD000005
D656	MA2051LF	DIODE	1	MAZ2051000LF
D657	MA2062LF	DIODE	1	MAZ2062000LF
D658	AK03WK	DIODE	1	B0JAMD000005
FP501,02	K5G202AA0003	FUSE	2	⚠
FP503	K5G302AA0003	FUSE	1	⚠
FP504,05	K5G3113A0001	FUSE	2	⚠
FP641	K5G202AA0003	FUSE	1	⚠
FP642,43	K5G402AA0003	FUSE	2	⚠
IC501-14	NJM4558L	IC	14	
IC641	AN6913	IC	1	AN6913-NT
IC643	KIA7915PI	IC	1	C0CABLG00006
IC644	KIA7815PI	IC	1	C0CAALG00016
IC701	PC900V	IC	1	B3PAE0000002
JK501	QJJG010AA	JACK HEADPHONE 1	1	
JK502-09	QJJG019AA	JACK	8	
JK709	SJSG1390A	JACK	1	K1CB108B0027
JP502	RWDJ06-150	JUMPER	1	
L501-04	QLQGT3T131LA	COIL	4	
L505-08	QLBG005A	COIL	4	
L509	QLQGT3T131LA	COIL	1	
L510-12	QLQGT1D600LA	COIL	3	
L643-49	QLBG005A	COIL	7	
L650,51	G0C121Z00001	COIL	2	
Q501	2SC1815TPE2	TRANSISTOR	1	B1AACF000023
Q502,03	2SJ498CDTA	TRANSISTOR	2	
Q504	2SD592AR	TRANSISTOR	1	2SD0592AR
Q505	2SB621A-R	TRANSISTOR	1	2SB0621AH
Q506	2SD592AR	TRANSISTOR	1	2SD0592AR
Q507	2SB621A-R	TRANSISTOR	1	2SB0621AH
Q508	SLA5007	TRANSISTOR	1	B1MADFC00001
Q509	2SJ425	TRANSISTOR	1	B1DCFG000001
Q510	2SK1188	TRANSISTOR	1	B1DAKG000001
Q511	DTC114YSA	TRANSISTOR	1	
Q512	2SA1015TPE2	TRANSISTOR	1	B1ACCF000016
Q513	2SC1815TPE2	TRANSISTOR	1	B1AACF000023
Q514	2SA1015TPE2	TRANSISTOR	1	B1ACCF000016
Q515,16	2SC1815TPE2	TRANSISTOR	2	B1AACF000023
Q641	2SA1643LF645	TRANSISTOR	1	B1BCED000002
Q642	2SC1815TPE2	TRANSISTOR	1	B1AACF000023
Q643	2SA1643LF645	TRANSISTOR	1	B1BCED000002

[illegible]	[illegible]	[illegible]	[illegible]	[illegible]

Ref. No.	Part No.	Part Name & Description	Pcs	Remarks
Q644	2SC1815TPE2	TRANSISTOR	1	B1AACF000023
Q645,46	2SA1015TPE2	TRANSISTOR	2	B1ACCF000016
Q647,48	2SC1815TPE2	TRANSISTOR	2	B1AACF000023
R501	ERDS2FJ472	4.7K	1	
R502	ERDS2FJ104	100K	1	
R503,04	ERDS2FJ222	2.2K	2	
R505	ERDS2FJ104	100K	1	
R506	ERDS2FJ152	1.5K	1	
R507	ERDS2FJ103	10K	1	
R508	ERDS2FJ683	68K	1	
R509	ERDS2FJ222	2.2K	1	
R510,11	ERDS2FJ683	68K	2	
R512,13	ERDS2FJ223	22K	2	
R514,15	ERDS2FJ154	150K	2	
R516,17	ERDS2FJ683	68K	2	
R518,19	ERDS2FJ332	3.3K	2	
R520,21	ERDS2FJ153	15K	2	
R522	ERDS2FJ104	100K	1	
R523,24	ERDS2FJ821	820	2	
R525,26	ERDS2FJ333	33K	2	
R527,28	ERDS2FJ103	10K	2	
R529,30	ERDS2FJ681	680	2	
R531	ERDS2FJ104	100K	1	
R532,33	ERDS2FJ683	68K	2	
R534	ERDS2TJ682T	6.8K	1	
R535	ERDS2FJ393	39K	1	
R536,37	ERDS2FJ333	33K	2	
R538	ERDS2FJ104	100K	1	
R539	ERDS2TJ682T	6.8K	1	
R540	ERDS2FJ393	39K	1	
R541,42	ERDS2FJ223	22K	2	
R543	ERDS2FJ153	15K	1	
R544,45	ERDS2FJ122	1.2K	2	
R546-48	ERDS2FJ153	15K	3	
R549,50	ERDS2FJ103	10K	2	
R551,52	ERDS2FJ153	15K	2	
R553,54	ERDS2FJ123	12K	2	
R555,56	ERDS2FJ681	680	2	
R557,58	ERDS2FJ473	47K	2	
R559,60	ERDS2FJ222	2.2K	2	
R561,62	ERDS2TJ682T	6.8K	2	
R563-66	ERDS2FJ473	47K	4	
R567,68	ERDS2FJ154	150K	2	
R569,70	ERDS2FJ821	820	2	
R571	ERDS2FJ222	2.2K	1	
R572,73	ERDS2FJ102	1K	2	
R574,75	ERDS2FJ104	100K	2	
R576	ERDS2FJ222	2.2K	1	
R577,78	ERDS2FJ220	22	2	
R579,80	ERDS2FJ102	1K	2	
R581,82	ERDS2FJ104	100K	2	
R583,84	ERDS2TJ183	18K	2	
R585-87	ERDS2FJ473	47K	3	
R588,89	ERG1SJ680	68	2	

Ref. No.	Part No.	Part Name & Description	Pcs	Remarks
R590-92	ERDS2FJ102	1K	3	
R593,94	ERDS2TJ183	18K	2	
R595	ERDS2TJ682T	6.8K	1	
R596,97	ERDS2FJ103	10K	2	
R598,99	ERDS2FJ563	56K	2	
R600	ERDS2FJ332	3.3K	1	
R601,02	ERDS2FJ473	47K	2	
R603	ERDS2TJ272T	2.7K	1	
R604,05	ERDS2FJ473	47K	2	
R606	ERDS2FJ332	3.3K	1	
R607,08	ERDS2FJ222	2.2K	2	
R609	ERDS2FJ473	47K	1	
R610	ERDS2TJ105T	1M	1	
R611	ERDS2FJ473	47K	1	
R612,13	ERDS2TJ105T	1M	2	
R614	ERDS2FJ473	47K	1	
R615,16	ERDS2FJ821	820	2	
R617	ERDS2FJ472	4.7K	1	
R618	ERDS2FJ222	2.2K	1	
R619,20	ERDS2FJ472	4.7K	2	
R621,22	ERDS2TJ105T	1M	2	
R623	ERDS2FJ222	2.2K	1	
R624-27	ERDS2TJ105T	1M	4	
R628,29	ERDS2FJ101	100	2	
R630	ERDS2FJ332	3.3K	1	
R631,32	ERDS2FJ103	10K	2	
R633	ERDS2FJ472	4.7K	1	
R634,35	ERDS2FJ101	100	2	
R636	ERDS2FJ473	47K	1	
R637	ERDS2FJ332	3.3K	1	
R638-40	ERDS2FJ101	100	3	
R641	ERG1SJ102	1W 1K	1	
R642	ERDS2FJ331	330	1	
R643	ERDS2FJ271	270	1	
R644,45	ERDS2FJ103	10K	2	
R646	ERDS2FJ102	1K	1	
R647	ERDS2FJ681	680	1	
R648,49	ERX1SJR33	1W 0.33	2	
R650	ERDS2FJ471	470	1	
R651,52	ERDS2FJ331	330	2	
R653	ERDS2FJ471	470	1	
R654	ERDS2FJ473	47K	1	
R655	ERDS2TJ823T	82K	1	
R656	ERDS2FJ473	47K	1	
R657	ERDS2TJ823T	82K	1	
R658,59	ERDS2FJ103	10K	2	
R660	ERDS2FJ470	47	1	
R661	ERDS2FJ330	33	1	
R662,63	ERDS2FJ151	150	2	
R664,65	ERDS2FJ680	68	2	
R666,67	ERD2FCJ6R8	1/4W 6.8 FUSE TYPE	2	⚠
R668,69	ERDS2FJ473	47K	2	
R670	ERDS2FJ152	1.5K	1	
R671-73	ERDS2FJ101	100	3	

Ref. No.	Part No.	Part Name & Description	Pcs	Remarks
R674	ERDS2FJ473	47K	1	
R675,76	ERDS2FJ103	10K	2	
R677	ERDS2TJ105T	1M	1	
R678	ERDS2FJ102	1K	1	
R679	ERTD2ZHK153T	15K	1	
R680	ERDS2FJ273	27K	1	
R681-83	ERDS2FJ102	1K	3	
<JACK P.C.B.>				
PCB7	SXPG238711B	JACK PCB	1	<RTL>
C701,02	QCBG1H473ZFA	0.047U	2	F1E1H473A001
C705-07	QCBG1H473ZFA	0.047U	3	F1E1H473A001
C709-16	QCBG1H473ZFA	0.047U	8	F1E1H473A001
CN701	K1MN20A00047	CONNECTOR	1	
CN702	QJSG022AA	CONNECTOR	1	K1FB104B0023
D701	RVD1SS133TA	DIODE	1	B0AACK000004
D702	RVD1SS133TA	DIODE	1	B0AACK000004
D703	RVD1SS133TA	DIODE	1	B0AACK000004
D704	RVD1SS133TA	DIODE	1	B0AACK000004
D705	RVD1SS133TA	DIODE	1	B0AACK000004
D707	RVD1SS133TA	DIODE	1	B0AACK000004
D708	RVD1SS133TA	DIODE	1	B0AACK000004
IC701	PC900V	IC	1	B3PAE0000002
JK701	K4BK01H00001	VIDEO OUT	1	
JK702	QJJG020AA	MIDI THRU	1	
JK703	QJJG020AA	MIDI OUT	1	
JK704	QJJG020AA	MIDI IN	1	
JK706	QJJG010AA	JACK	1	
JK707	QJJG019AA	JACK	1	
JK708	QJJG019AA	JACK	1	
JK709	SJSG1390A	FC	1	K1CB108B0027
L701	QLQGT3T131LA	COIL	1	
L703	QLQGT3T131LA	COIL	1	
L704	QLQGT3T131LA	COIL	1	
L705	QLQGT3T131LA	COIL	1	
L706	QLQGT3T131LA	COIL	1	
L708	QLQGT3T131LA	COIL	1	
L709	QLQGT3T131LA	COIL	1	
L710	QLQGT3T131LA	COIL	1	
L711	QLQGT3T131LA	COIL	1	
Q701	2SA1015TPE2	TRANSISTOR	1	B1ACCF000016
R701	ERDS2FJ221	22	1	
R703	ERDS2FJ220	22	1	
R704	ERDS2FJ221	22	1	
R706	ERDS2FJ220	22	1	
R707	ERDS2FJ221	220	1	
R708	ERDS2FJ331	330	1	
R709	ERDS2FJ332	3.3K	1	
R711	ERDS2FJ102	1K	1	
R712	ERDS2FJ152	1.5K	1	
R713-18	ERDS2FJ102	1K	6	
SW701	QSSGT016AA	SW	1	K0D112B00112

Ref. No.	Part No.	Part Name & Description	Pcs	Remarks
<INV P.C.B.>				
PCB8	SXPG238811B	INV PCB	1	<RTL>
C801	ECUV1C104KBV	0.1U	1	ECJ1VB1C104K
C802	ECEA1AKS221	6V 220U	1	
C803	ECQV1H104JZ	0.1U	1	
C804	ECCW3F180JGE	18P	1	
C805	ECUV1C104KBV	0.1U	1	ECJ1VB1C104K
CN801	K1MN20B00049	CONNECTOR	1	
CN802	SJPG1JS140A	CONNECTOR	1	
CN803	RJP4G27ZA	CONNECTOR	1	K1KA04A00063
CN804	K1KA02B00124	CONNECTOR	1	
L803	QLBG005A	COIL	1	
L804	QLQGT1B101KA	COIL	1	G0C101K00030
Q801,02	2SD0592ARA	TRANSISTOR	2	
R801,02	ERJ3GEYJ472V	4.7K	2	
T801	QTDG005A	TRANSFORMER	1	G4F1A0000003
Z801-03	EXBV8V220JV	22X4	3	
<ASUB P.C.B.>				
PCB9	SXPG238811A	ASUB PCB	1	<RTL>
C820	ECJ1VB1H102K	0.001U	1	
C821	ECUV1H080DCV	8P	1	ECJ1VC1H080D
C822	ECUV1C104KBV	0.1U	1	ECJ1VB1C104K
C823	ECUV1H471KBV	470P	1	ECJ1VB1H471K
C824	ECJ1VC1H151J	150P	1	
C825	ECUV1H471KBV	470P	1	ECJ1VB1H471K
C826-28	ECJ1VC1H151J	150P	3	
C829,30	ECEA1EKA470B	25V 47U	2	
C831,32	ECJ1VC1H151J	150P	2	
C833	ECUV1H471KBV	470P	1	ECJ1VB1H471K
C836-38	ECJ1VC1H151J	150P	3	
C841	ECEA1CKS100	16V 10U	1	
CN820,21	QJUG05309AA	CONNECTOR	2	
D820-25	MA2J11100L	DIODE	6	
D826	MA8062LTX	DIODE	1	MAZ80620LL
IC820	TC7WU04FU	IC	1	C0JBAB000339
Q820	2SB0709ARL	TRANSISTOR	1	
Q821	2SD0601AQL	TRANSISTOR	1	
Q822	2SB0709ARL	TRANSISTOR	1	
Q823	2SD0601AQL	TRANSISTOR	1	
Q824	2SB0709ARL	TRANSISTOR	1	
Q825	2SD0601AQL	TRANSISTOR	1	
Q826-28	2SB0709ARL	TRANSISTOR	3	
Q829	2SD0601AQL	TRANSISTOR	1	
Q830	2SB0709ARL	TRANSISTOR	1	
Q831	2SD0601AQL	TRANSISTOR	1	
Q832	2SB0709ARL	TRANSISTOR	1	
Q833	2SD0601AQL	TRANSISTOR	1	
Q834,35	2SB0709ARL	TRANSISTOR	2	
Q836	2SD0601AQL	TRANSISTOR	1	
Q837	2SB0709ARL	TRANSISTOR	1	
Q838	2SD0601AQL	TRANSISTOR	1	

Ref. No.	Part No.	Part Name & Description	Pcs	Remarks
Q839,40	2SB0709ARL	TRANSISTOR	2	
Q841,42	2SD0601AQL	TRANSISTOR	2	
Q843	2SB0709ARL	TRANSISTOR	1	
Q844	2SD0601AQL	TRANSISTOR	1	
Q845	2SB0709ARL	TRANSISTOR	1	
Q846	2SD0601AQL	TRANSISTOR	1	
Q847,48	2SB0709ARL	TRANSISTOR	2	
Q849	2SD0601AQL	TRANSISTOR	1	
Q850-52	2SB0709ARL	TRANSISTOR	3	
Q853,54	2SD0601AQL	TRANSISTOR	2	
Q855	2SB0709ARL	TRANSISTOR	1	
Q856	2SD0601AQL	TRANSISTOR	1	
Q857	2SB0709ARL	TRANSISTOR	1	
Q858	2SD0601AQL	TRANSISTOR	1	
Q859	2SB0709ARL	TRANSISTOR	1	
Q860,61	2SD0601AQL	TRANSISTOR	2	
R820	ERJ3GEYJ102V	1K	1	
R821,22	ERJ3GEYJ332V	3.3K	2	D0GB332JA002
R823	ERJ3GEYJ102V	1K	1	
R824,25	ERJ3GEYJ471V	470	2	
R826	ERJ3GEYJ472V	4.7K	1	
R827	ERJ3GEYJ152V	1.5K	1	
R828	ERJ3GEYJ471V	470	1	
R829	ERJ3GEYJ472V	4.7K	1	
R830	ERJ3GEYJ822V	8.2K	1	D0GB822JA002
R831	ERJ3GEYJ821V	820	1	
R833	ERD2FCVG471T	1/4W 470 FUSE TYPE	1	⚠
R834	ERJ3GEYJ332V	3.3K	1	D0GB332JA002
R835	ERJ3GEYJ153V	15K	1	
R836	ERJ3GEYJ332V	3.3K	1	D0GB332JA002
R838-40	ERD2FCVG471T	1/4W 470 FUSE TYPE	3	⚠
R841,42	ERJ3GEYJ472V	4.7K	2	
R843	ERJ3GEYJ332V	3.3K	1	D0GB332JA002
R844,45	ERJ3GEYJ472V	4.7K	2	
R846	ERJ3GEYJ153V	15K	1	
R847	ERJ3GEYJ332V	3.3K	1	D0GB332JA002
R848,49	ERD2FCVG471T	1/4W 470 FUSE TYPE	2	⚠
R850	ERD2FCG101	100	1	⚠
R851-54	ERJ3GEYJ472V	4.7K	4	
R855	ERD2FCG101	100	1	⚠
R857	ERD2FCVG471T	1/4W 470 FUSE TYPE	1	⚠
R858	ERJ3GEYJ332V	3.3K	1	D0GB332JA002
R859	ERJ3GEYJ153V	15K	1	
R860	ERJ3GEYJ332V	3.3K	1	D0GB332JA002
R861,62	ERD2FCVG471T	1/4W 470 FUSE TYPE	2	⚠
R863-66	ERJ3GEYJ472V	4.7K	4	
R867	ERD2FCG101	100	1	⚠
R868,69	ERJ3GEYJ821V	820	2	
R870,71	ERJ3GEYJ471V	470	2	
<ACP P.C.B.>				

Ref. No.	Part No.	Part Name & Description	Pcs	Remarks
PCB5	SXPG232941	ACP PCB	1	<RTL>EF EH EV GN GH
PCB5	SXPG232951	ACP PCB	1	<RTL>P PC
PCB5	SXPG232961	ACP PCB	1	<RTL>GM GU GT
C1	F1B2E4720001	4700P	1	⚠
C2	ECQU2A104MN	0.1	1	⚠
F1	XBA1C20NB100	FUSE 2A	1	(P PC) ⚠
F1	XBA2C12TB0L	FUSE T1.25A	1	(GU GT GM) ⚠
F2	XBA2C08TB0L	FUSE T800MA	1	K5D801BLA001 (GU) ⚠
F2	XBA2C08TB0L	FUSE T800MA	1	K5D801BLA001 (GT) ⚠
F2	XBA2C08TB0L	FUSE T800MA	1	K5D801BLA001 (GM) ⚠
F3	XBA2C08TB0L	FUSE T800MA	1	K5D801BLA001 (EX) ⚠
F3	XBA2C08TB0L	FUSE T800MA	1	K5D801BLA001 (EB) ⚠
F3	XBA2C08TB0L	FUSE T800MA	1	K5D801BLA001 (EQ) ⚠
F3	XBA2C08TB0L	FUSE T800MA	1	K5D801BLA001 (EG) ⚠
F3	XBA2C08TB0L	FUSE T800MA	1	K5D801BLA001 (EF) ⚠
F3	XBA2C08TB0L	FUSE T800MA	1	K5D801BLA001 (EH) ⚠
F3	XBA2C08TB0L	FUSE T800MA	1	K5D801BLA001 (EV) ⚠
F3	XBA2C08TB0L	FUSE T800MA	1	K5D801BLA001 (GN) ⚠
F3	XBA2C08TB0L	FUSE T800MA	1	K5D801BLA001 (GH) ⚠
JK1	SJVD0203B	JACK AC IN	1	⚠
L1	QLQGT2T100LA	10UHX2	1	⚠
S1	SSRG100A	SW VOLTAGE SELECTOR	1	K0ZZ00000503 (GU) ⚠
S1	SSRG100A	SW VOLTAGE SELECTOR	1	K0ZZ00000503 (GT) ⚠
S1	SSRG100A	SW VOLTAGE SELECTOR	1	K0ZZ00000503 (GM) ⚠
<CPL P.C.B.>				
PCB11	SXPG238911A	CPL PCB	1	<RTL>
C1101-03	QCBG1H473ZFA	0.047U	3	F1E1H473A001
C1105	ECA0JAK221XH	6V 220U	1	
C1106	QCBG1H473ZFA	0.047U	1	F1E1H473A001
C1108,09	QCBG1H473ZFA	0.047U	2	F1E1H473A001
C1110	ECA0JAK470XH	6V 47U	1	
C1111-16	QCBG1H473ZFA	0.047U	6	F1E1H473A001
CN1101	K1KA07C00007	CONNECTOR	1	
CN1102	K1KA04B00032	CONNECTOR	1	
CN1104	SJPG2JS130A	CONNECTOR	1	
CN1105	K1KA12C00012	CONNECTOR	1	
CN1106	K1KA06C00008	CONNECTOR	1	
D1101	RVD1SS133TA	DIODE	1	B0AACK000004
D1102	RVD1SS133TA	DIODE	1	B0AACK000004
D1103	RVD1SS133TA	DIODE	1	B0AACK000004
D1104	RVD1SS133TA	DIODE	1	B0AACK000004
D1105	RVD1SS133TA	DIODE	1	B0AACK000004
D1106	RVD1SS133TA	DIODE	1	B0AACK000004
D1107	RVD1SS133TA	DIODE	1	B0AACK000004
D1108	RVD1SS133TA	DIODE	1	B0AACK000004
D1109	LN282RPXVTX3	LED	1	LNJ282RKRX02
D1110	LN382GPXVTX3	LED	1	LNJ382GKGX02

[redacted]	[redacted]	[redacted]	[redacted]	[redacted]

Ref. No.	Part No.	Part Name & Description	Pcs	Remarks
D1111	LN382GPXVTX3	LED	1	LNJ382GKGX02
D1112	LN382GPXVTX3	LED	1	LNJ382GKGX02
D1113	LN282RPXVTX3	LED	1	LNJ282RKRX02
D1114	LN282RPXVTX3	LED	1	LNJ282RKRX02
D1115	LN282RPXVTX3	LED	1	LNJ282RKRX02
D1116	LN282RPXVTX3	LED	1	LNJ282RKRX02
D1117	RVD1SS133TA	DIODE	1	B0AACK000004
D1118	RVD1SS133TA	DIODE	1	B0AACK000004
D1119	RVD1SS133TA	DIODE	1	B0AACK000004
D1120	RVD1SS133TA	DIODE	1	B0AACK000004
D1121	RVD1SS133TA	DIODE	1	B0AACK000004
D1122	RVD1SS133TA	DIODE	1	B0AACK000004
D1123	RVD1SS133TA	DIODE	1	B0AACK000004
D1124	RVD1SS133TA	DIODE	1	B0AACK000004
D1125	LN382GPXVTX3	LED	1	LNJ382GKGX02
D1126	LN282RPXVTX3	LED	1	LNJ282RKRX02
D1127	LN382GPXVTX3	LED	1	LNJ382GKGX02
D1128-32	LN282RPXVTX3	LED	5	LNJ282RKRX02
D1133-40	RVD1SS133TA	DIODE	8	B0AACK000004
D1141-48	LN282RPXVTX3	LED	8	LNJ282RKRX02
D1149-56	RVD1SS133TA	DIODE	8	B0AACK000004
D1157-64	LN282RPXVTX3	LED	8	LNJ282RKRX02
D1165-72	RVD1SS133TA	DIODE	8	B0AACK000004
D1173	LN382GPXVTX3	LED	1	LNJ382GKGX02
D1174	LN282RPXVTX3	LED	1	LNJ282RKRX02
D1175-79	LN382GPXVTX3	LED	5	LNJ382GKGX02
D1180	LN282RPXVTX3	LED	1	LNJ282RKRX02
D1181-94	RVD1SS133TA	DIODE	13	B0AACK000004
IC1101	M37471M2196S	IC	1	C2BBDB000023
IC1102	HD74LS138P	DECODER	1	C0JACN000001
IC1103	HD74LS07P	IC	1	C0JACB000006
Q1101-08	2SA830STPB	TRANSISTOR	8	
R1101	ERDS2FJ102	1K	1	
R1103,04	ERDS2FJ102	1K	2	
R1105	ERDS2FJ104	100K	1	
R1106,07	ERDS2FJ101	100	2	
R1108	ERDS2FJ103	10K	1	
R1109	ERDS2FJ333	33K	1	
R1110	ERDS2FJ103	10K	1	
R1112-27	ERDS2FJ103	10K	16	
R1128-33	ERDS2FJ680	68	6	
SW1102-38	EVQ21405R	PUSH SWITCH	37	EVQ21405RJ
SW1139-42	EVQ21507K	PUSH SWITCH	4	
SW1143	EVQ21405R	PUSH SWITCH	1	EVQ21405RJ
SW1144	EVQ21507K	PUSH SWITCH	1	
SW1145	EVQ21405R	PUSH SWITCH	1	EVQ21405RJ
SW1146	EVQ21507K	PUSH SWITCH	1	
SW1147,48	EVQ21405R	PUSH SWITCH	2	EVQ21405RJ
SW1149	JSE0013	PUSH SWITCH	1	K0L1BA000007
SW1150-54	EVQ21405R	PUSH SWITCH	5	EVQ21405RJ
VR1102	EVD07205B24G	VOLUME	1	D2B6A24B0003
VR1103	QRVG30P02B53	VOLUME	1	D2B6C53B0003
VR1104	QRVG20N01B14	VOLUME	1	D2B4A14B0003
VR1105	D2B4C53A0002	VOLUME	1	

Ref. No.	Part No.	Part Name & Description	Pcs	Remarks
X1101	EFOEC4004T3	4MHZ CERAMIC OSCILATOR	1	
<CPC P.C.B.>				
PCB12	SXPG238911B	CPC PCB	1	<RTL>
CN1107	K1KA12C00012	CONNECTOR	1	
CN1108	K1KA06C00008	CONNECTOR	1	
D1195-02	RVD1SS133TA	DIODE	8	B0AACK000004
D1203-06	LN282RPXVTX3	LED	4	LNJ282RKRX02
D1207-38	RVD1SS133TA	DIODE	32	B0AACK000004
SW1155-94	EVQ21405R	PUSH SWITCH	40	EVQ21405RJ
<CPR P.C.B.>				
PCB13	SXPG239011A	CPR PCB	1	<RTL>
C1003	ECA0JAK221XH	6V 220U	1	
C1004	QCBG1H473ZFA	0.047U	1	F1E1H473A001
C1005	F1D1H102A012	0.001U	1	
C1006	ECBT1H333KB5	0.033U	1	F1D1H333A012
C1007	ECA0JAK470XH	6V 47U	1	
C1008	QCBG1H473ZFA	0.047U	1	F1E1H473A001
C1009	F1D1H102A012	0.001U	1	
C1010	QCBG1H473ZFA	0.047U	1	F1E1H473A001
C1011	ECA0JAK221XH	6V 220U	1	
C1012-14	QCBG1H473ZFA	0.047U	3	F1E1H473A001
CN1001	K1KA07C00007	CONNECTOR	1	
CN1002	K1KA04B00032	CONNECTOR	1	
CN1003	SJPG2JS080A	CONNECTOR	1	
D1001-08	RVD1SS133TA	DIODE	8	B0AACK000004
D1009	LN382GPXVTX3	LED	1	LNJ382GKGX02
D1010	RVD1SS133TA	DIODE	1	B0AACK000004
D1011,12	LN382GPXVTX3	LED	2	LNJ382GKGX02
D1013,14	LN282RPXVTX3	LED	2	LNJ282RKRX02
D1015-22	RVD1SS133TA	DIODE	8	B0AACK000004
D1023-26	LN382GPXVTX3	LED	4	LNJ382GKGX02
D1027,28	LN282RPXVTX3	LED	2	LNJ282RKRX02
D1029-35	RVD1SS133TA	DIODE	7	B0AACK000004
D1037	LN382GPXVTX3	LED	1	LNJ382GKGX02
D1039-42	LN282RPXVTX3	LED	4	LNJ282RKRX02
D1043-50	RVD1SS133TA	DIODE	8	B0AACK000004
D1051	B3ABA0000397	DIODE	1	
D1052-56	LN282RPXVTX3	LED	5	LNJ282RKRX02
D1057-64	RVD1SS133TA	DIODE	8	B0AACK000004
D1065	B3ABA0000397	DIODE	1	
D1066	LN382GPXVTX3	LED	1	LNJ382GKGX02
D1067-70	LN282RPXVTX3	LED	4	LNJ282RKRX02
D1071-78	RVD1SS133TA	DIODE	8	B0AACK000004
D1079,80	B3ABA0000397	DIODE	2	
D1081-84	LN282RPXVTX3	LED	4	LNJ282RKRX02
D1085-92	RVD1SS133TA	DIODE	8	B0AACK000004
D1093,94	B3ABA0000397	DIODE	2	
D1095-98	LN282RPXVTX3	LED	4	LNJ282RKRX02
D1099,00	RVD1SS133TA	DIODE	2	B0AACK000004
D1101	RVD1SS133TA	DIODE	1	B0AACK000004

Ref. No.	Part No.	Part Name & Description	Pcs	Remarks
D1102	RVD1SS133TA	DIODE	1	B0AACK000004
D1103	RVD1SS133TA	DIODE	1	B0AACK000004
D1104	RVD1SS133TA	DIODE	1	B0AACK000004
D1105	RVD1SS133TA	DIODE	1	B0AACK000004
D1106	RVD1SS133TA	DIODE	1	B0AACK000004
D1107	LN282RPXVTX3	LED	1	LNJ282RKRX02
D1108	B3ABA0000397	DIODE	1	
D1109	LN282RPXVTX3	LED	1	LNJ282RKRX02
D1110	LN382GPXVTX3	LED	1	LNJ382GKGX02
D1111	LN282RPXVTX3	LED	1	LNJ282RKRX02
D1112	LN282RPXVTX3	LED	1	LNJ282RKRX02
D1114	LN282RPXVTX3	LED	1	LNJ282RKRX02
D1115	B3ABA0000397	DIODE	1	
D1116	LN282RPXVTX3	LED	1	LNJ282RKRX02
D1117	LN282RPXVTX3	LED	1	LNJ282RKRX02
D1118	LN282RPXVTX3	LED	1	LNJ282RKRX02
D1119	LN282RPXVTX3	LED	1	LNJ282RKRX02
D1120	LN282RPXVTX3	LED	1	LNJ282RKRX02
D1121	LN282RPXVTX3	LED	1	LNJ282RKRX02
D1122	LN282RPXVTX3	LED	1	LNJ282RKRX02
D1123	LN282RPXVTX3	LED	1	LNJ282RKRX02
D1124	LN382GPXVTX3	LED	1	LNJ382GKGX02
IC1001	M37471M2196S	IC	1	C2BBDB000023
IC1002,03	HD74LS07P	IC	2	C0JACB000006
Q1001	2SB0621AHA	TRANSISTOR	1	
Q1002-07	2SA830STPB	TRANSISTOR	6	
R1001,02	ERDS2FJ472	4.7K	2	
R1003	ERDS2FJ102	1K	1	
R1004	ERDS2FJ684	680K	1	
R1005,06	ERDS2FJ473	47K	2	
R1007,08	ERDS2FJ101	100	2	
R1009	ERDS2FJ103	10K	1	
R1010	ERDS2FJ333	33K	1	
R1011	ERDS2FJ103	10K	1	
R1013	ERDS2FJ101	100	1	
R1014-24	ERDS2FJ103	10K	11	
R1025	ERDS2FJ471	470	1	
R1026-28	ERDS2FJ103	10K	3	
R1029-38	ERDS2FJ680	68	10	
R1039-44	ERDS2FJ472	4.7K	6	
SW1001-07	EVQ21405R	PUSH SWITCH	7	EVQ21405RJ
SW1009-23	EVQ21405R	PUSH SWITCH	15	EVQ21405RJ
SW1025-64	EVQ21405R	PUSH SWITCH	40	EVQ21405RJ
X1001	EFOEC4004T3	OSCILATOR	1	
<SD P.C.B.>				
PCB10	SXPG238811C	SD PCB	1	<RTL>
C921	ECUV1C104KBV	0.1U	1	ECJ1VB1C104K
CN921	SJPG1JS110A	CONNECTOR	1	
CN922	K1NA09E00023	CONNECTOR	1	
R921-24	ERJ3GEYJ103V	10K	4	D0GB103JA002
R925	ERJ3GEYJ334V	330K	1	
R926,27	ERJ3GEYJ101V	100	2	

Ref. No.	Part No.	Part Name & Description	Pcs	Remarks
R928	ERJ3GEYJ220V	22	1	
R929-31	ERJ3GEYJ101V	100	3	
SW921	JSE0013	SWITCH	1	K0L1BA000007
<SDSW P.C.B.>				
PCB17	SXPG239011C	SDSW PCB	1	<RTL>
CN901	SJPG2JS100A	CONNECTOR	1	
D901	LN282RPXVTX3	LED	1	LNJ282RKRX02
D902	LN382GPXVTX3	LED	1	LNJ382GKGX02
D903	LMW9A8BYB0A1	DIODE	1	
Q901,02	2SC1815TPE2	TRANSISTOR	2	B1AACF000023
R901-03	ERDS2FJ102	1K	3	
R904,05	ERDS2FJ470	47	2	
R906-10	ERDS2FJ102	1K	5	
R911	ERDS2FJ101	100	1	
SW901-06	EVQ21405R	PUSH SWITCH	6	EVQ21405RJ
<ROT P.C.B.>				
PCB14	SXPG239011B	ROT PCB	1	<RTL>
SW1101	QSRGT003AA	ENCORDER SWITCH	1	K9AA024A0005
W1103	QEUGS4K06YY	CONNECTOR	1	
<HP P.C.B.>				
PCB16	SXPG239011D	HP PCB	1	<RTL>
C752,53	ECBT1H333KB5	0.033U	2	F1D1H333A012
C754	QCBG1H473ZFA	0.047U	1	F1E1H473A001
CN751	SJPG2JS050A	CONNECTOR	1	
JK751	QJJG018AA	JACK	1	
L751	QLQGT3T131LA	COIL	1	
<BEND P.C.B.>				
PCB15	SXPG239011E	BEND PCB	1	<RTL>
CN752	RJP4G27ZA	CONNECTOR	1	K1KA04A00063
R751,52	ER0S2TKF1001	1K	2	EROS2TKF1001
VR751	EVA07015B54G	VR	1	D2BKB5420001
VR752	EVA07115B14G	VR	1	D2BGB14B0002
<MKB1 P.C.B.>				
PCB2	SXPG232411A	MKB1 PCB	1	<RTL>
D1	RVD1SS133TA	DIODE	1	B0AACK000004 MKB1
D2	RVD1SS133TA	DIODE	1	B0AACK000004 MKB1
D3-48	RVD1SS133TA	DIODE	46	B0AACK000004 MKB1
<MKB2 P.C.B.>				
PCB3	SXPG232411B	MKB2 PCB	1	<RTL>
C1	ECEA0JKA470	6.3V 47	1	
C2	QCBG1H104ZFA	50V 0.1	1	F1E1H104A001
C3	QCBG1H104ZFA	50V 0.1	1	F1E1H104A001

Ref. No.	Part No.	Part Name & Description	Pcs	Remarks
C4	QCBG1H104ZFA	50V 0.1	1	F1E1H104A001
C5	TCBT1H151KB5	150P	1	F1D1H151A012
C6	TCBT1H151KB5	150P	1	F1D1H151A012
C7	TCBT1H151KB5	150P	1	F1D1H151A012
C8	TCBT1H151KB5	150P	1	F1D1H151A012
C9	TCBT1H151KB5	150P	1	F1D1H151A012
C10	TCBT1H151KB5	150P	1	F1D1H151A012
C11	TCBT1H151KB5	150P	1	F1D1H151A012
C12	TCBT1H151KB5	150P	1	F1D1H151A012
D49-96	RVD1SS133TA	DIODE	48	B0AACK000004
IC1	HD74LS138P	IC	1	C0JACN000001
IC2	HD74LS138P	IC	1	C0JACN000001
<MKB3 P.C.B.>				
PCB4	SXPG232511	MKB3 PCB	1	<RTL>
C13	QCBG1H104ZFA	50V 0.1	1	F1E1H104A001
D97-00	RVD1SS133TA	DIODE	4	B0AACK000004
D101	RVD1SS133TA	DIODE	1	B0AACK000004
D102	RVD1SS133TA	DIODE	1	B0AACK000004
D103	RVD1SS133TA	DIODE	1	B0AACK000004
D104-22	RVD1SS133TA	DIODE	19	B0AACK000004
IC3	M5218AL	IC	1	C0AABB000054
R1	ERDS2FJ102	1K	1	
R2	ERDS2FJ101	100	1	
R3	ERDS2FJ472	4.7K	1	
R4	ERDS2FJ472	4.7K	1	
VR1	EVSG0E1B223A	VR AFTER TOUCH SENSOR ADJ	1	D3BA62230001
	POWER SW			
S1	QSPG1010AA	POWER SW	1	⚠
	SP			
SP1	L0AA14A00008	14CM SP	1	
SP2	QASG12P07B	12CM SP	2	
SP3	L0AA06A00012	6.5CM SP	2	
	TRANSFORMER			
T1	QTPG1M056A	TRANSFORMER	1	⚠ G4C6AED00002 P PC
T1	QTPG1M057A	TRANSFORMER	1	⚠ G4C6AEK00003 GU GM GT
T1	QTPG1M058A	TRANSFORMER	1	⚠ G4C6AEH00001 EX EB EQ EG
T1	QTPG1M058A	TRANSFORMER	1	⚠ G4C6AEH00001 EF EH EV GN GH
	CONNECTION WITH WIRE			
W1	QEUGMLW12C	20P FFC WIRE(JACK-MAIN)	1	
W2	QEUGMLW34CZ	20P FFC WIRE (LCD-INV)	1	
W3	QEXGSS05010A	FAJ-JACK WIRE(MKB3-MAIN)	1	
W4	QEXGSS05080A	CONNECTOR WIRE(HP-FAJ)	1	
W5	QEXGSS10020A	WIRE W/CON(MAIN-SDSW)	1	
W6	QEXGSS11015A	CONNECTOR WIRE(SD-MAIN)	1	
W7	QEXGSS12050A	CONNECTOR WIRE(FAJ-MAIN)	1	
W8	QEXGSS16035A	CONNECTOR WIRE(MKB2-MAIN)	1	
W9	QEXGVH03076B	CONNECTOR WIRE(SP WIRE L)	1	
W10	QEXGVH06103B	CONNECTOR WIRE(SP WIRE R)	1	
W11	QEXGZA34050B	CONNECTOR WIRE(FDD-MAIN)	1	

Ref. No.	Part No.	Part Name & Description	Pcs	Remarks
W12	QEXGVH03025B	WIRE WITH CONNECTOR	1	
W13	QEXGSS08040A	WIRE W/CON(CPR-MAIN)	1	
W14	QEXGSS13050A	CONNECTION WITH WIRE	1	
W15	QEXGSS14055A	CONNECTOR WIRE	1	
W16	QEXGZA04010A	WIRE W/CON(CPL-INV)	1	
W17	QEXGZA04105A	WIRE W/CON(CPL-BEND)	1	
W18	QEXGZA06010A	WIRE W/CON(CPL-CPC)	1	
W19	QEXGZA07055A	WIRE W/CON(CPL-CPR)	1	
W20	QEXGZA12015A	WIRE W/CON(CPL-CPC)	1	
W21	QEXGZA13041A	CONNECTION WITH WIRE	1	

18. Cabinet Parts Location

19. Manual Keyboard Parts and Control Panel Parts Location

REF.NO.	DESCRIPTION
32	PERFORMANCE PADS(1-4,5 SOLO,6 SOLO)
33(A)	PERFORMANCE PADS(AUTO SETTING,BANK,STOP)
33(B)	PART SELECT(LEFT,RIGHT1,RIGHT2)
34	ONE TOUGH PLAY,SPLIT POINT
52	SEQUENCER(PLAY,EASY REC)
35	DEMO
36	MUSIC STYLE ARRANGER
37	VARIATION(1,2,3,4)
38(A)	SET,PANEL MEMORY(1-8,NEXT BANK,BANK VIEW)
38(B)	SEQUENCER(DISC,PROGRAM MENUS)
39	AUTO PLAY CHORD
40(A)	RHYTHM GROUP(8&16 BEAT,ROCK&POP,BALLAD,JAZZ&SWING)
40(B)	RHYTHM GROUP(BALLROOM,MOVIE&SHOW,ENTERTAINER)
40(C)	RHYTHM GROUP(60S & 70S,MODERN DANCE,SOUL&R&B,COUNTRY&WESTERN)
40(D)	RHYTHM GROUP(MARCH&WALTZ,LATIN&WORLD,CUSTOM,MEMORY,)
40(E)	SOUND GROUP(PIANO,GUITAR,MALLET&ORCH PERC,WORLD)
40(F)	SOUND GROUP(STRINGS&VOCAL,BRASS,SAX&WOODWIND,ORGAN&ACCORDION)

REF.NO.	DESCRIPTION
40(G)	SOUND GROUP(DIGITAL DRAWBER,ORGAN TABS,ACCORDION REGISTER,PAD)
40(H)	SOUND GROUP(SYNTH,BASS,DRUM KITS,MEMORY)
41(A)	FADE IN/OUT
41(B)	TRANSPOSE
41(C)	R1/R2 OCTAVE
42(A)	MUSIC STYLIST
42(B)	SD LOAD
43(A)	OTHER PART&FR,HELP
43(B)	DISPLAY HOLD
45(A)	CONTRAST,MUTE
45(B)	PAGE
46	FILL IN,INTRO&ENDING
47	TAP TEMPO,SYNCHRO&BREAK
49	TECHNI-CHORD,SOLO
50	CONDUCTOR(LEFT,RIGHT2,RIGHT1)
51(A)	PART EFFECT(SUSTAIN,DIGITAL EFFECT,SOUND DSP,VARIATION)
51(B)	GLOBAL EFFECT(CHORUS,MULTI,REVERB,MIC)
52	SEQUENCER(PLAY,EASY REC)
54	CUSTOMPANEL,CUSTOMIZE,FAVORITES
56	PANEL MEMORY(1-8),BANK VIEW,NEXT BANK
60	START/STOP
61	PANEL MEMORY,SET

20. Packaging

21. Schematic Diagram for printing with A4

S020700000 HM/AM

[1] © 2002 Matsushita Electric Industrial Co., Ltd. All rights reserved.
Unauthorized copying and distribution is a violation of law.

TONE SIGNAL
CONTROL SIGNAL

FDD
FLOPPY DISC DRIVE

LCD
LCD
LCD BACK LIGHT

K INV
CN801
CN804
T801
TRANSFORMER
Q801,802
CN802
CN803
TO CPR CN1002

J JACK
CN702
CN701
CN105
USB
MIDI THRU
JK702
Q701
MIDI OUT
JK703
MIDI IN
JK704
IC701
PHOTO COUPLER
SW701
BASSPEDAL
EXP
JK706
FOOT SWITCH
FS1
JK707
FS2
JK708
FC
JK709

A MAIN
CN101
CN102

Q102
Q105,106
Q104

IC4
MIDI RX
MIDI TX
USB.SI
USB.SO
RST
SNS
32BIT MICRO CONTROLLER
A0-A25
CP.CLK
CP.DATA
D0-D31

ADDRESS BUS
DATA BUS

IC103
A1-A3
RESET
FLOPPY DISC CONTROLLER
D16-D23

IC104
A0-A20
SD.PLY/SD.ACC
SD.FWD/SD.BWD/
SD.STP/SD.SRT/
SD.VDN/SD.VUP
COLOR LCD CONTROLLER
D16-D31

IC106
1A1
2A1
2A4
3A1-3A4
16 BIT BUS BUFFER
D16-D31

IC303
DA0-DA7
D-FLIP FLOP
D16-D23

IC302
IC304
DD0-DD15
BUS TRANSCEIVER
D16-D31

IC307
DA0-DA9,DA13
16M SDRAM
DD16-DD31

IC308
DA0-DA9,DA13
16M SDRAM
DD0-DD15

IC306
DA0-DA23
DIGITAL SIGNAL PROCESSOR
DD0-DD31
SDIE0-SDIE3
SDOE0-SDOE3

IC12
D16-D31
16M DRAM
A2-A13

IC13
D0-D15
16M DRAM
A2-A13

IC14
D16-D31
1M FAST SRAMx16
A2-A17

IC15
D0-D15
1M FAST SRAMx16
A2-A17

IC16
D16-D31
32M FLASH ROM
A2-A22

IC17
D0-D15
32M FLASH ROM
A2-A22

IC18
D16-D31
64M ROM
A1-A21

IC19
D16-D31
64M ROM
A1-A21

IC21
D16-D31
32M FLASH ROM
A1-A21

IC23
D16-D31
2M SRAM x16
A1-A17

IC201
SDIE0-SDIE3
SDOE0-SDOE3
D16-D31
SDO1
SDO0
SDI
A1-A4
AWD0-AWD15
MASTER TONE GENERATOR LSI
AWAX0-AWAX23
AWAY0-AWAY23
KB0-KB4
KF0-KF3,KS0-KS3

IC205
D16-D31
A1-A4
BWD0-BWD15
SUB TONE GENERATOR LSI
BWAX0-BWAX23
BWAY0-BWAY23
SUB0-SUB3

IC203
AWD0-AWD15
128M ROM
AWAY0-AWAY22

IC204
AWD0-AWD15
128M ROM
AWAX0-AWAX22

IC208
BWD0-BWD15
128M ROM
BWAY0-BWAY22

IC207
BWD0-BWD15
128M ROM
BWAX0-BWAX22

SX-KN7000 BLOCK 1/2 DIAGRAM (1/2)

Q SD I/F

CN921 CN922

IC402

ARO
ALO

SDDAT0-SDDAT3

SD DECORDER

CN401

SDA1-SDA16 SDD0-SDD15

DATA BUS

DATA BUS

IC414

4M FLASH

SDA1-SDA18

SDD0-SDD15

IC403

EEPROM

DI

DO

IC401

SDA1-SDA18 SDD0-SDD15

SD u-COM

USB+
USB-

MIDI RX

USB CPU

USBM.TX

DU0-DU7

DATA BUS

IC408

IC407

CPU

DU0-DU7

SDIU

SDOU

IC406

D/A CONVERTER

IC409

IC410

A/D CONVERTER

USB.SI
USB.SO

CN301

TO FAJ CN502

IC310

D/A CONVERTER

IC312

CN302

TO FAJ CN501

IC311

D/A CONVERTER

IC314

IC313

IC315

Q307

Q308

IC316

O SD PLAY SW/ VOL

CN402

CN901

SW

LED

SD.PLY

Q309

IC309

A/D CONVERTER

CN103

TO CPR CN1003

CN104

CN201

N MKB3

SWITCHES & DIODES

CN8

CN9

CN10

CN11

IC3

VR1

AFTER TOUCH SENSOR ADJ

AFTER TOUCH SENSOR

M MKB2

CN5

CN6

IC2

DECODER

IC1

DECODER

CN4

CN7

SWITCHES & DIODES

CN3

L MKB1

CN1

CN2

SWITCHES & DIODES

SX-KN7000 BLOCK 1/2 DIAGRAM (2/2)

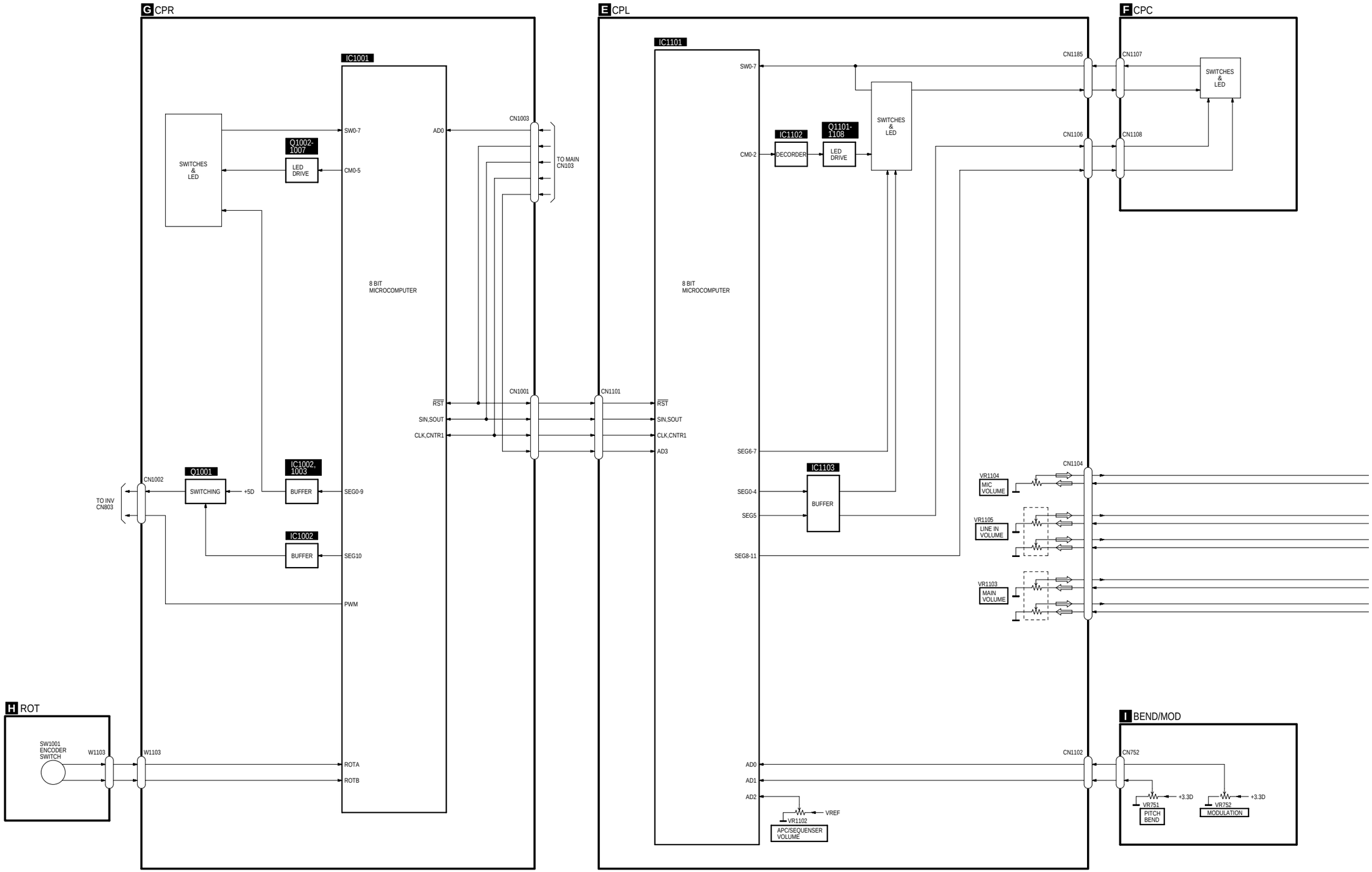

SX-KN7000 BLOCK 2/2 DIAGRAM (1/2)

B FAJ

IC641, Q643,644
+5V REGULATOR
+5D
IC641, Q641,642
+3.3V REGULATOR
+3.3D
Q645-648
OVERCURRENT PROTECTOR
FP641
IC644
+15V REGULATOR
+15A
FP642
IC643
-15V REGULATOR
-15A
FP643
D646-D649
CN641
T1
POWER TRANSFORMER
D ACP
CN2
CN1
S1
POWER SWITCH
JK1
PC1
AC CORD
D644,645
TO MAIN CN301
CN502
TO MAIN CN302
CN501
CN503
IC507
IC501
JK506
SUBOUT L
JK507
SUBOUT R
JK501
MIC
JK502
LINEIN L
JK503
LINEIN R
JK504
AUXIN L
JK505
AUXIN R
JK508
MAINOUT L
JK509
MAINOUT R
IC511
HEAD PHONE AMP
Q504-507 IC509
P HP
CN504
JK751
HEAD PHONE
C ASUB
CN505
CN820
CN506
CN821
IC506
IC502
IC503-505, 508
EQUA-LIZING
IC510
IC512,513
Q508
CN507
SP-L 12cm,8Ω
TW-L 6.5cm,8Ω
CN508
SP-R 12cm,8Ω
TW-R 6.5cm,8Ω
WF 14cm,8Ω
IC514
Q509,510

SX-KN7000 BLOCK 2/2 DIAGRAM (2/2)

A B C D E F G H I J K L

1 2 3 4 5 6 7 8

A MAIN P.C.B. (COMPONENT SIDE)

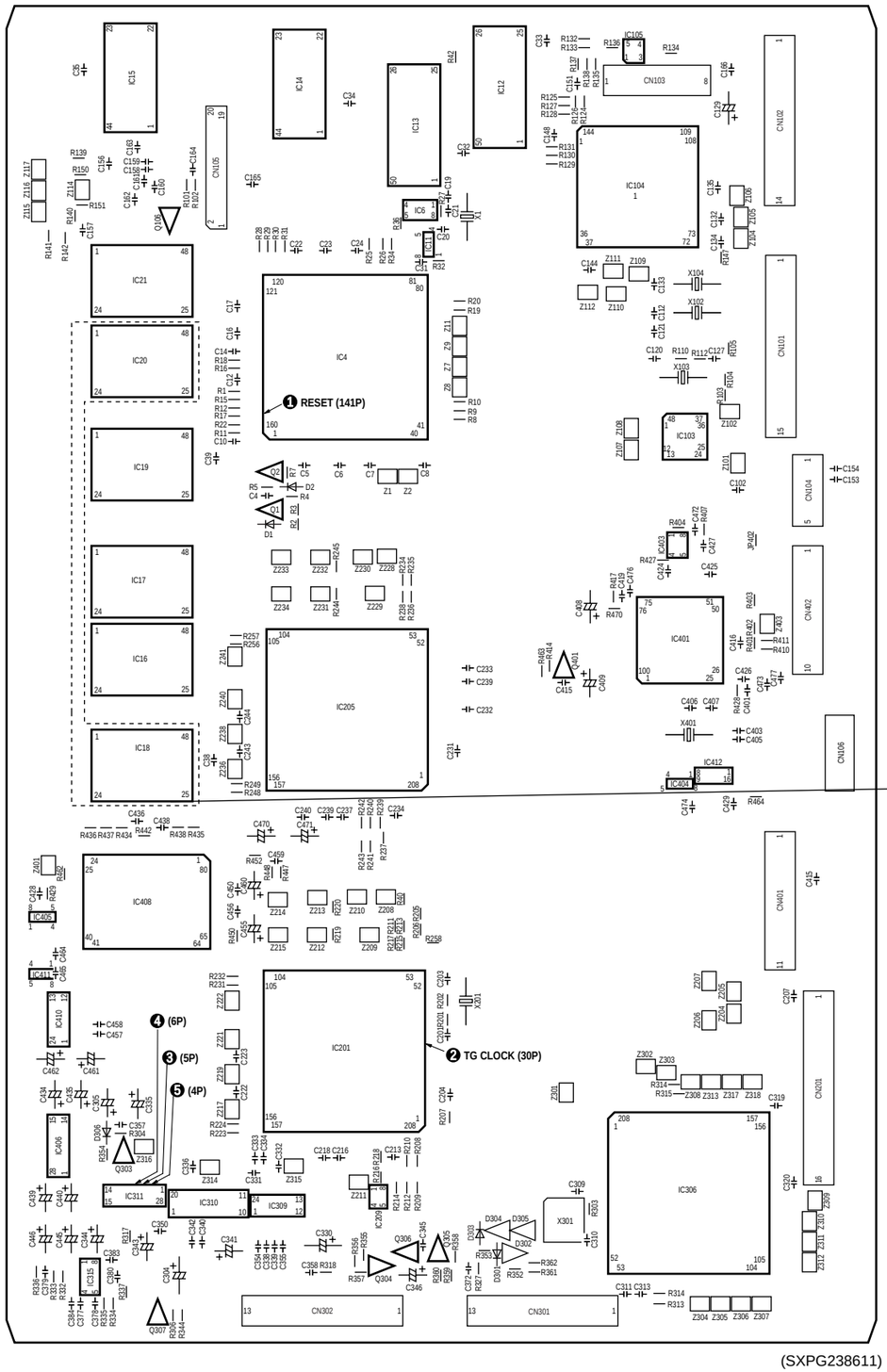

(SXPG238611)

A MAIN P.C.B. (FOIL SIDE)

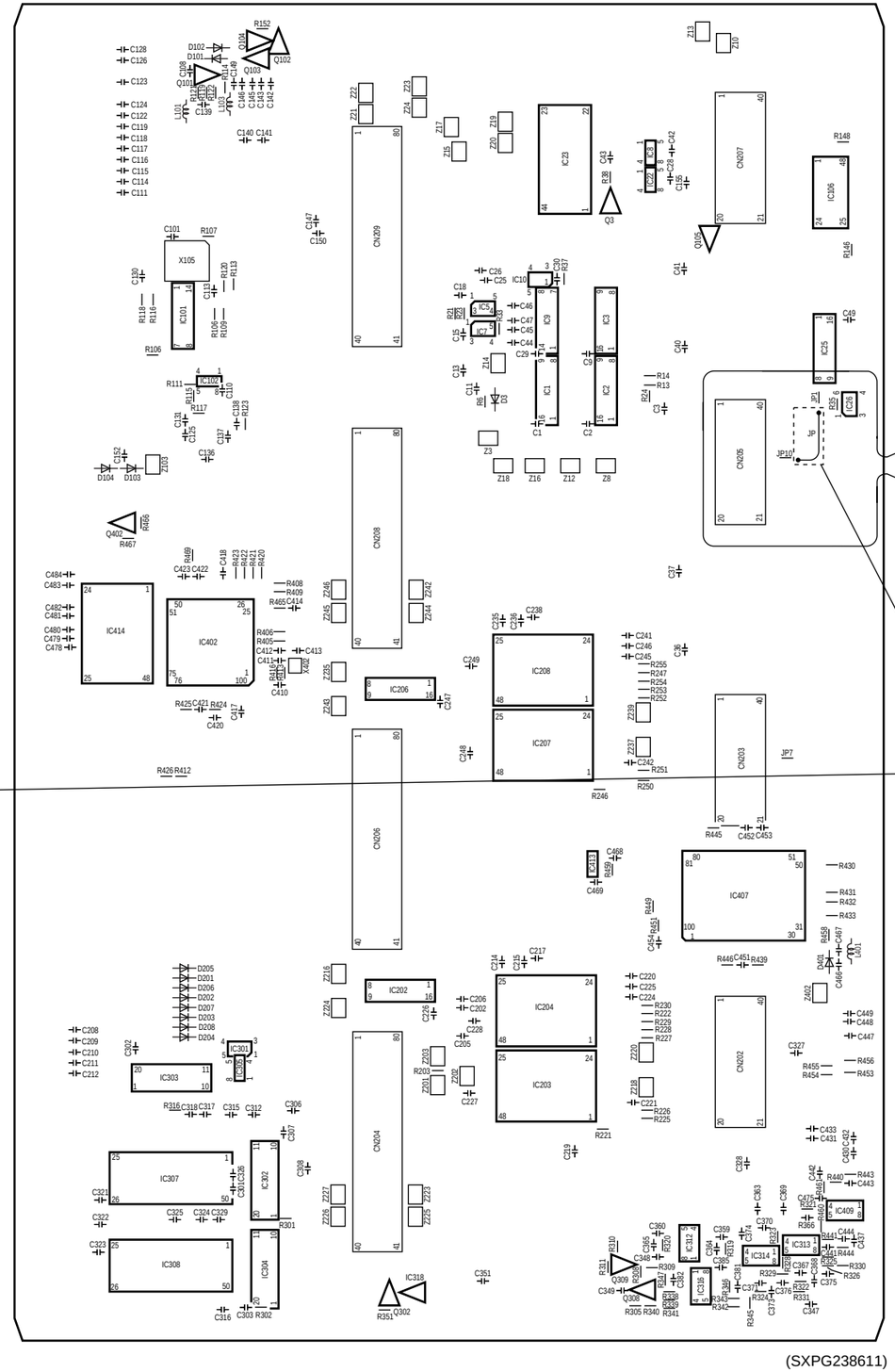

(SXPG238611)

	IC20	JP	IC18
FIRST	○	○	×
SECOND	×	×	○

* We do not supply IC20 as replacement parts.

(Example)
Transistor's symbolmark:
Q1
C
B E
Applied for all transistors

SX-KN7000
MAIN P.C.B.

B FAJ P.C.B.

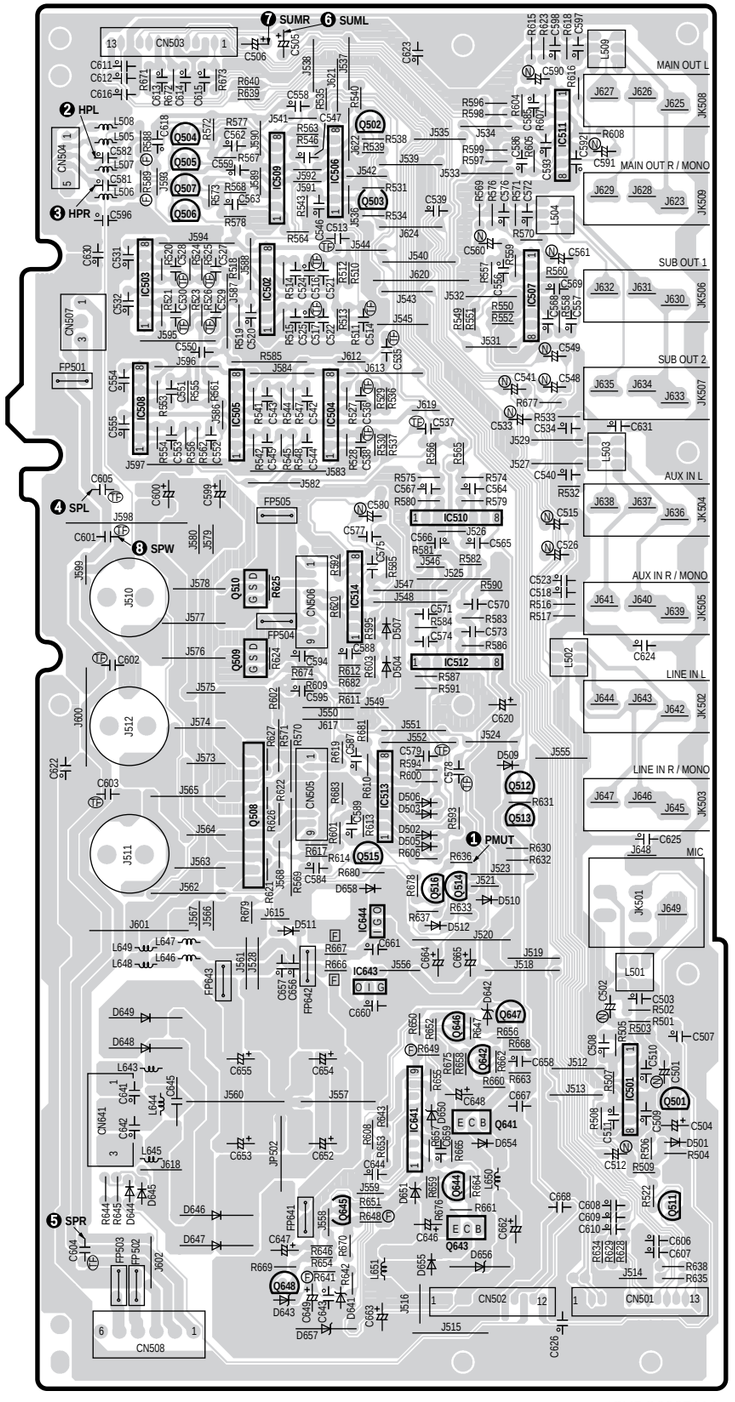

(SXPG238711A)

C ASUB P.C.B. (COMPONENT SIDE)

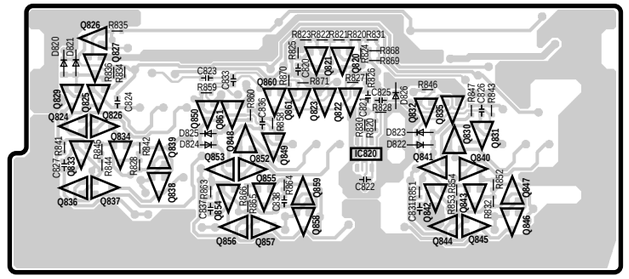

(SXPG238811A)

C ASUB P.C.B. (FOIL SIDE)

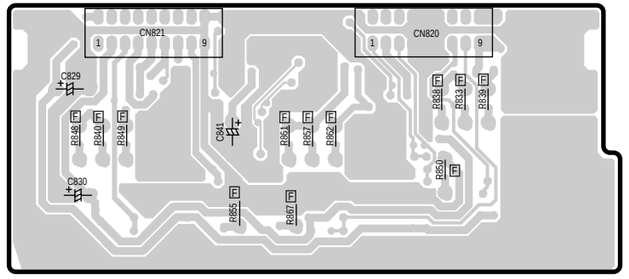

(SXPG238811A)

D ACP P.C.B.(EX,EQ,EB,EG,EF,EH,EV,GN,GH)

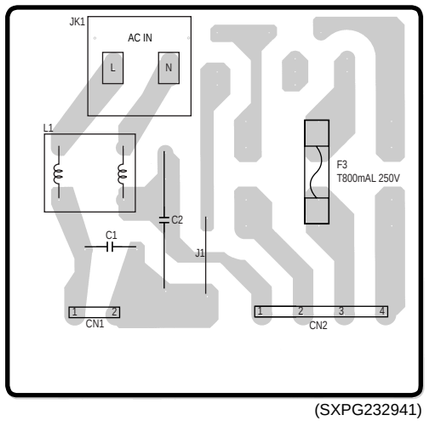

(SXPG232941)

D ACP P.C.B.(P,PC)

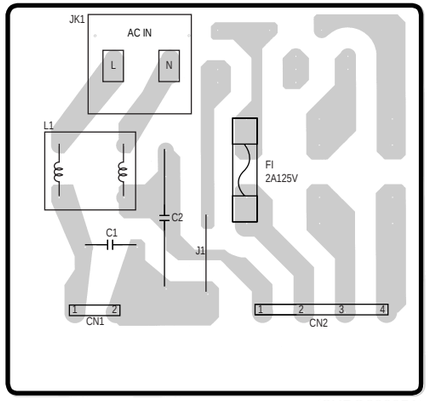

(SXPG232951)

D ACP P.C.B.(GU,GT,GM)

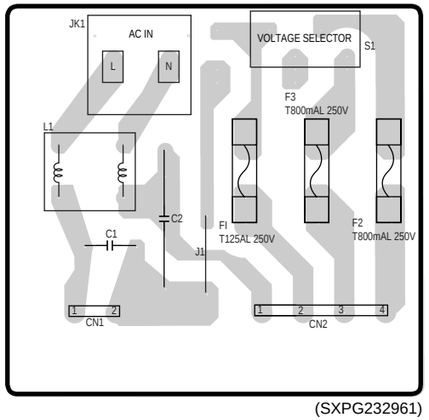

(SXPG232961)

(Example)
Transistor's symbolmark:
Q1

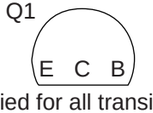

Applied for all transistors

E CPL P.C.B.

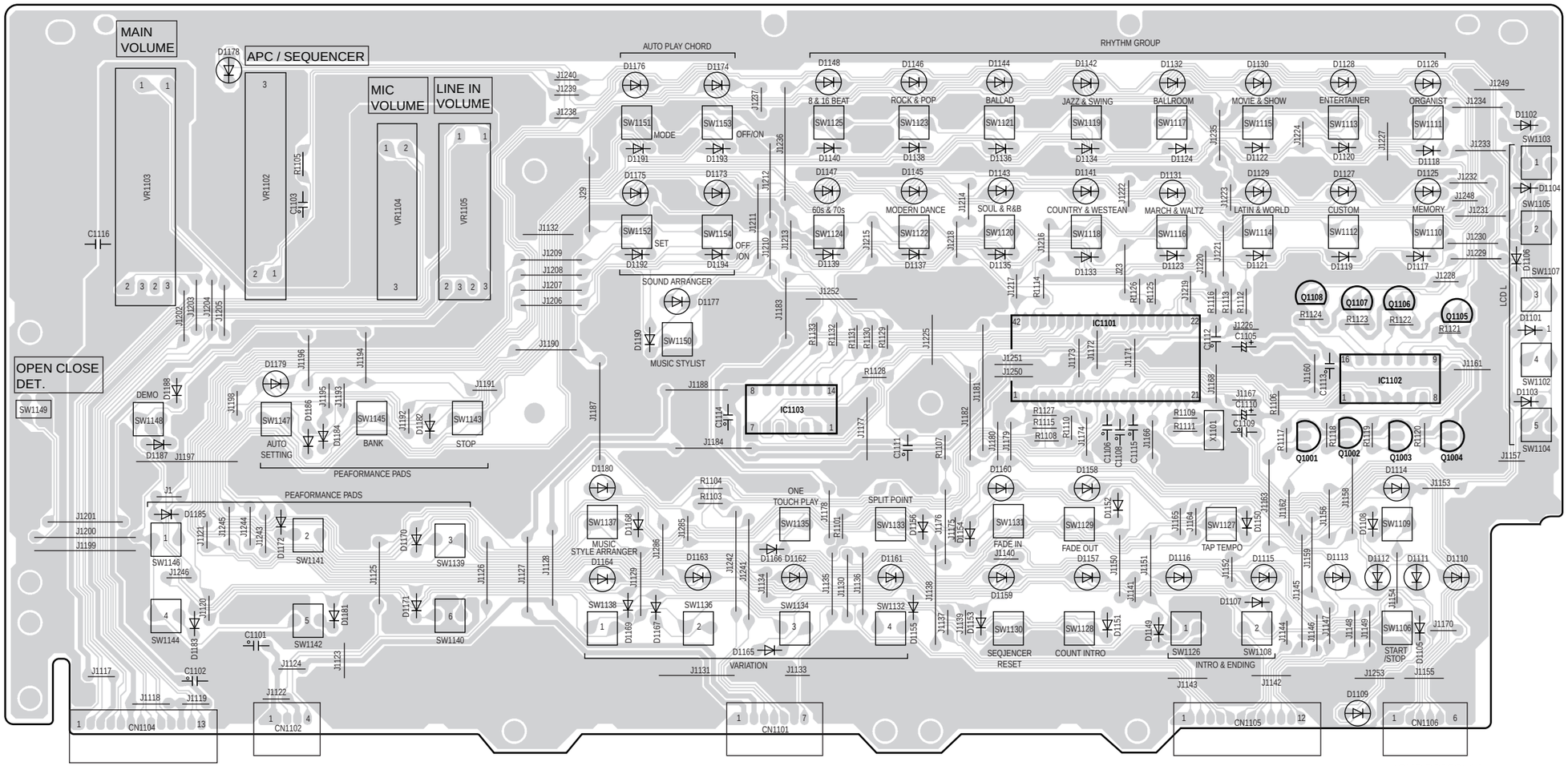

(SXPG238911A)

F CPC P.C.B.

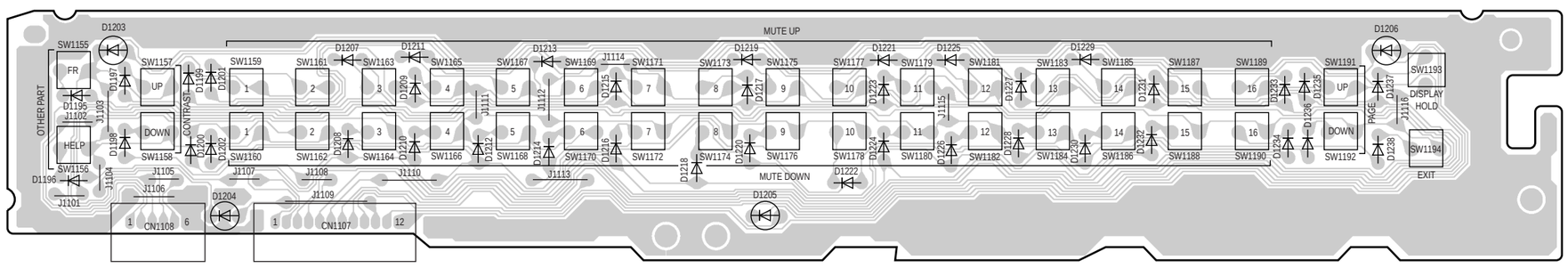

(SXPG238911B)

(Example)
Transistor's symbolmark:
Q1

E C B

Applied for all transistors

G CPR P.C.B.

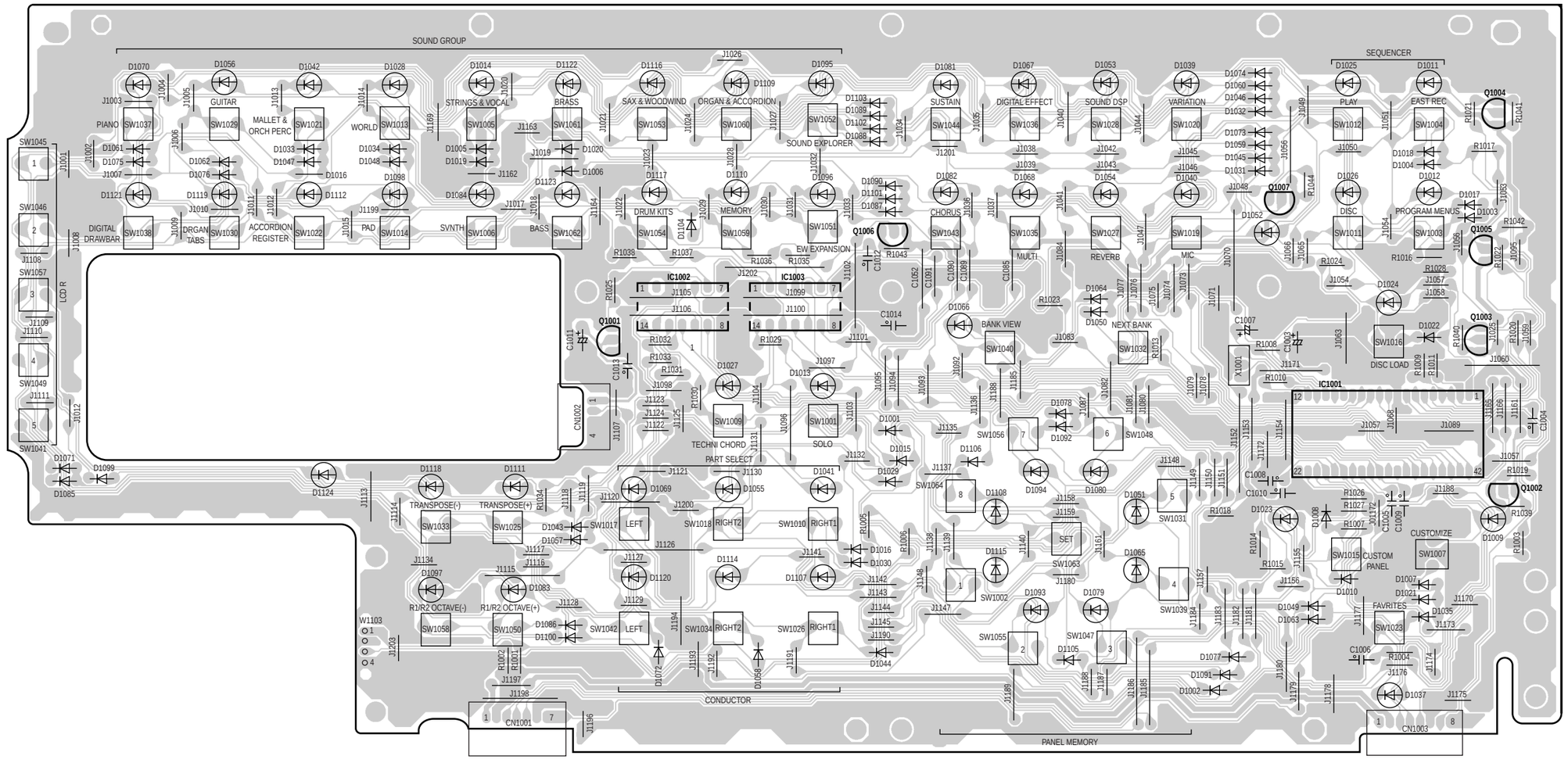

(SXPG239011A)

H ROT P.C.B.

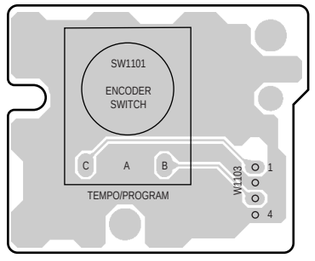

(SXPG239011B)

I BEND/MOD P.C.B.

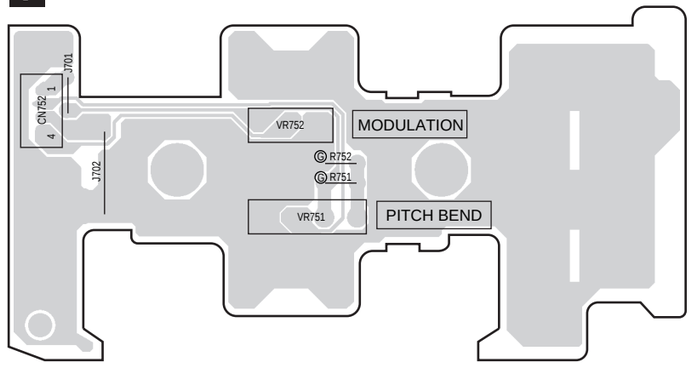

(SXPG239011E)

(Example)
Transistor's symbolmark:
Q1

Applied for all transistors

J JACK P.C.B.

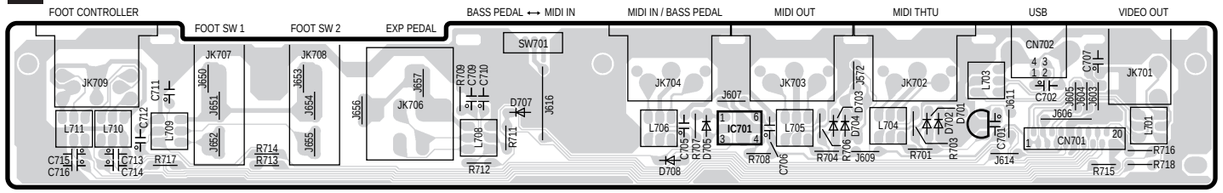

(SXPG238711B)

(Example)
Transistor's symbolmark:
Q1

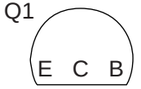

Applied for all transistors

K INV P.C.B. (COMPONENT SIDE)

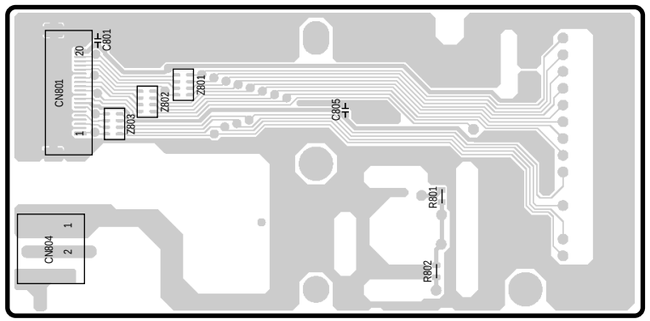

(SXPG238811B)

K INV P.C.B. (FOIL SIDE)

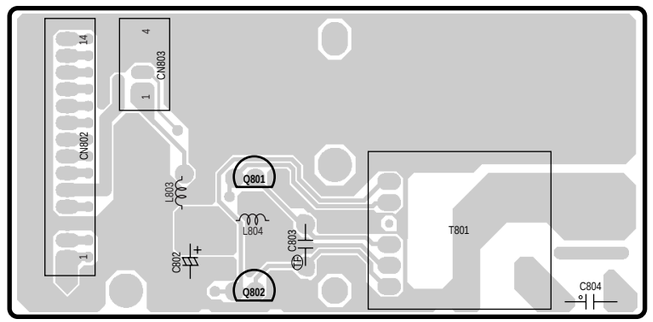

(SXPG238811B)

L MKB1 P.C.B.

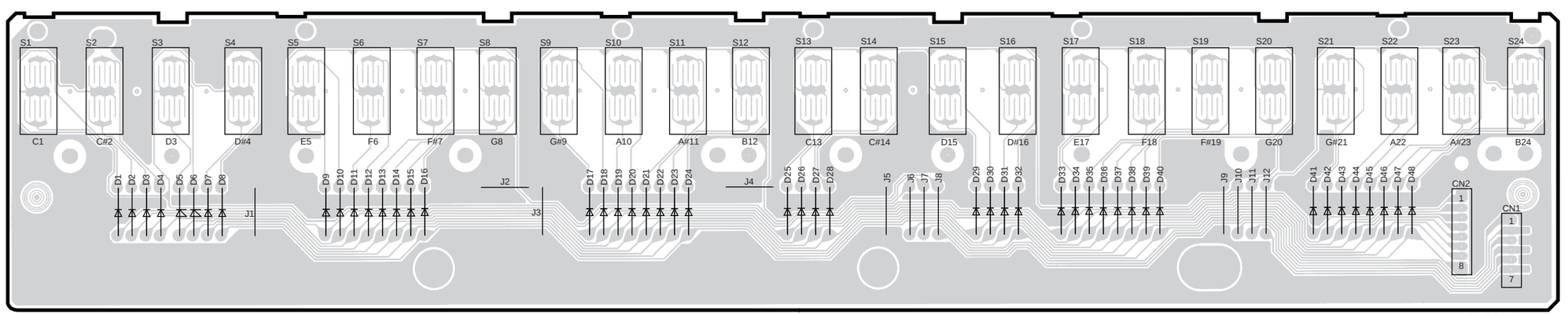

(SXPG232411A)

M MKB2 P.C.B.

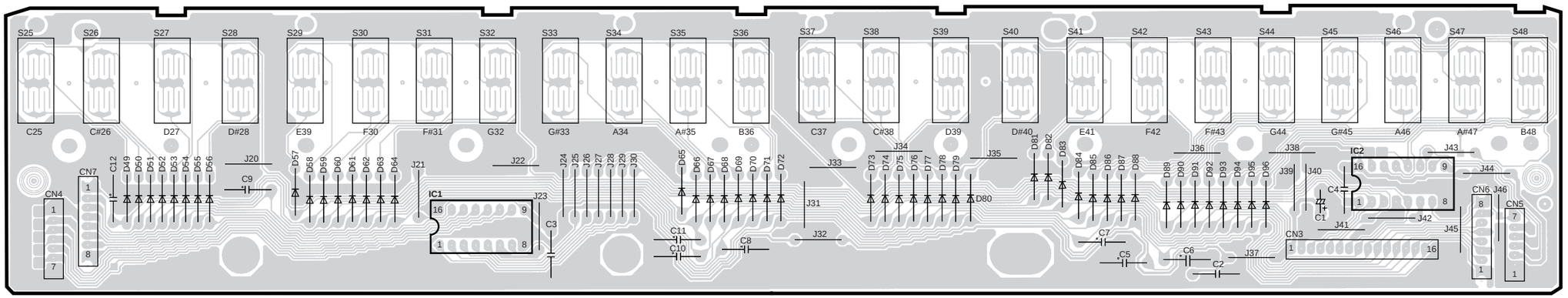

(SXPG232421B)

N MKB3 P.C.B.

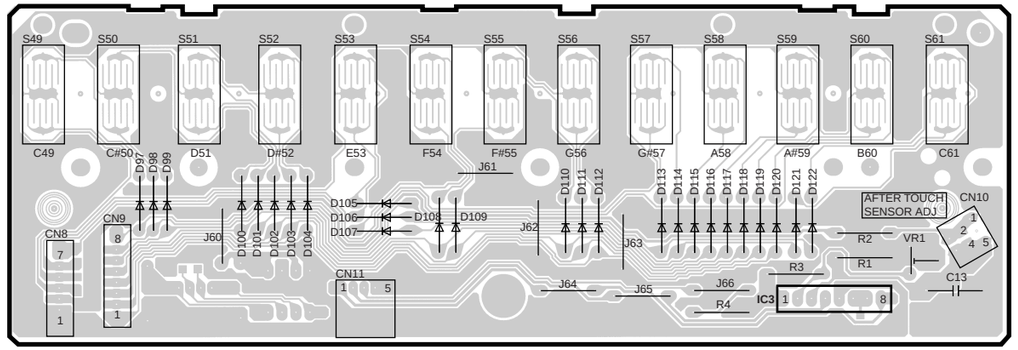

(SXPG232511)

P HP P.C.B.

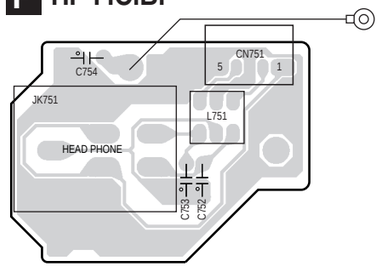

(SXPG239011D)

(Example)
Transistor's symbolmark:
Q1

Applied for all transistors

O SD PLAY SW/VOL P.C.B.

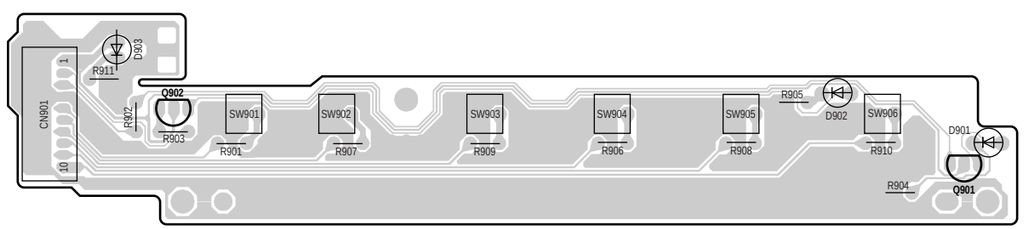

(SXPG239011C)

Q SD I/F P.C.B. (COMPONENT SIDE)

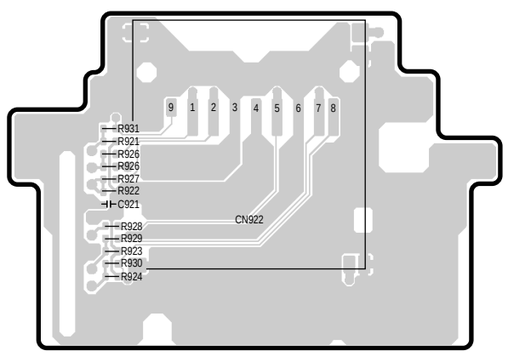

(SXPG238811C)

Q SD I/F P.C.B. (FOIL SIDE)

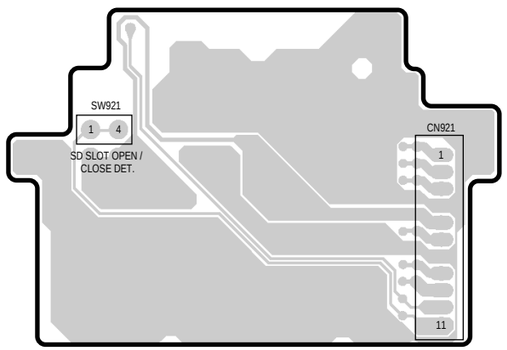

(SXPG238811C)

Keyboard [SX-KN7000]

Function		Transmitted	Recognized	Remarks
Basic Channel	Default	1-16	1-16	Assigned to the part.
	Changed	1-16	1-16	
Mode	Default	3	Mode 3	OMNI OFF, POLY MODE
	Messages	Mode 3, 4 (M=1)	Mode 3, 4 (M=1)	* M=1 only
	Altered	—	—	
Note Number		0-127	0-127	
	True voice	—	0-127	
Velocity	Note ON	○	○	
	Note OFF	×	×	
After Touch	Key's	×	×	
	Ch's	○ × *	○ × *	
Pitch Bend		○ × *	○ × *	
Control Change	0,32	○ × *	○ × *	Bank Select MSB, LSB
	1	○ × *	○ × *	Modulation
	5	○	○	Portamento time
	6,38	○ × *	○ × *	Data entry MSB, LSB
	7	○ × *	○ × *	Volume
	10	○ × *	○ × *	Panpot
	11	○ × *	○ × *	Expression
	12,13	○ × *	○ × *	Sound DSP
	64	○ × *	○ × *	Sustain
	65	○	○	Portamento on / off
	66	○	○	Sostenuto
	67	○	○	Soft Pedal
	71~78	○ × *	○ × *	Sound controllers
	80~83	○	○	Part Equalizer
	91~95	○ × *	○ × *	Effect 1~5 Depth
	98,99	○ × *	○ × *	NRPN
	100,101	○ × *	○ × *	RPN
Prog Change		○ × *	○ × *	
	True #	—	0-127	
System exclusive		○ × *	○ × *	
System common	Song Pos	○ × *	○ × *	
	Song Sel	○ × *	○ × *	
	Tune	×	×	
System Real Time	Clock	○ × *	○ × *	
	Commands	○ × *	○ × *	Start / Stop, continue
Aux Messages	Local ON / OFF	×	×	
	All notes OFF	×	○	
	Active Sense	○	○	
	Reset	×	×	
Notes		○ × * ····· Whether or not the data for each of these items is transmitted / received can be set.		

Mode 1: OMNI ON, POLY Mode 2: OMNI ON, MONO ○: Yes
Mode 3: OMNI OFF, POLY Mode 4: OMNI OFF, MONO ×: No

Controls and functions

MUSIC STYLIST
You can choose to have all the settings of this instrument automatically set.

AUTO PLAY CHORD
Add an automatic accompaniment to your selected rhythm.

RHYTHM GROUP
Various rhythm patterns are available for each rhythm group.

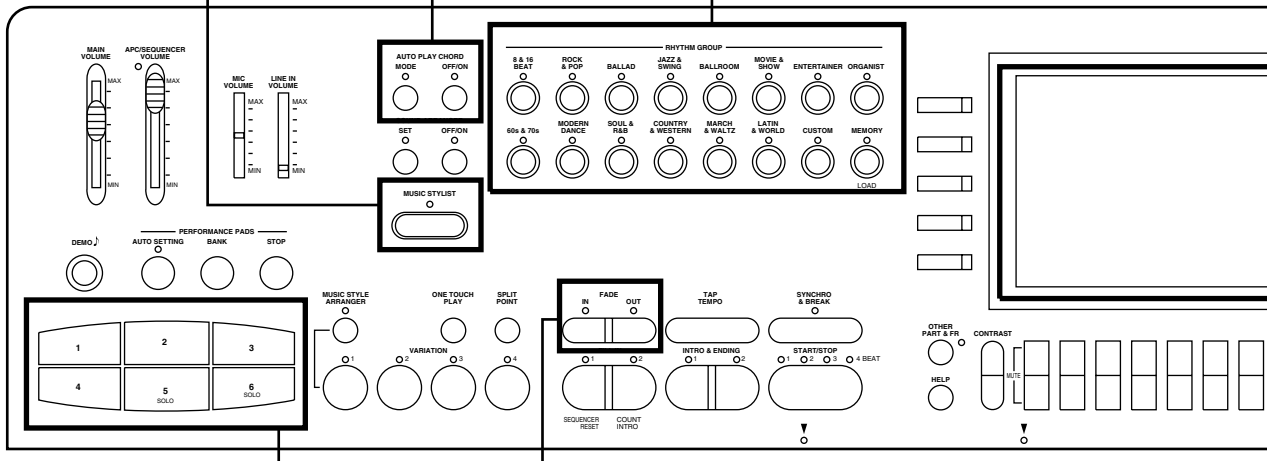

FADE IN/OUT
Begin your song with a slowly increasing volume, or end it by having the sound slowly fade away.

PERFORMANCE PADS
Add various phrases to your performance with the pad buttons.

PITCH BEND/MODULATION
The **PITCH BEND** wheel allows a “sliding” change in the pitch. The **MODULATION** wheel is used to add vibrato to the sound.

DISPLAY
Displays performance information, function settings and other messages.

- Adjust the readability with the **CONTRAST** buttons at the lower left side of the display.

TECHNI-CHORD
Block chords are automatically added to the melody.

SOUND GROUP
Various sounds are available for each sound group.

SEQUENCER
Record and play back your performance.

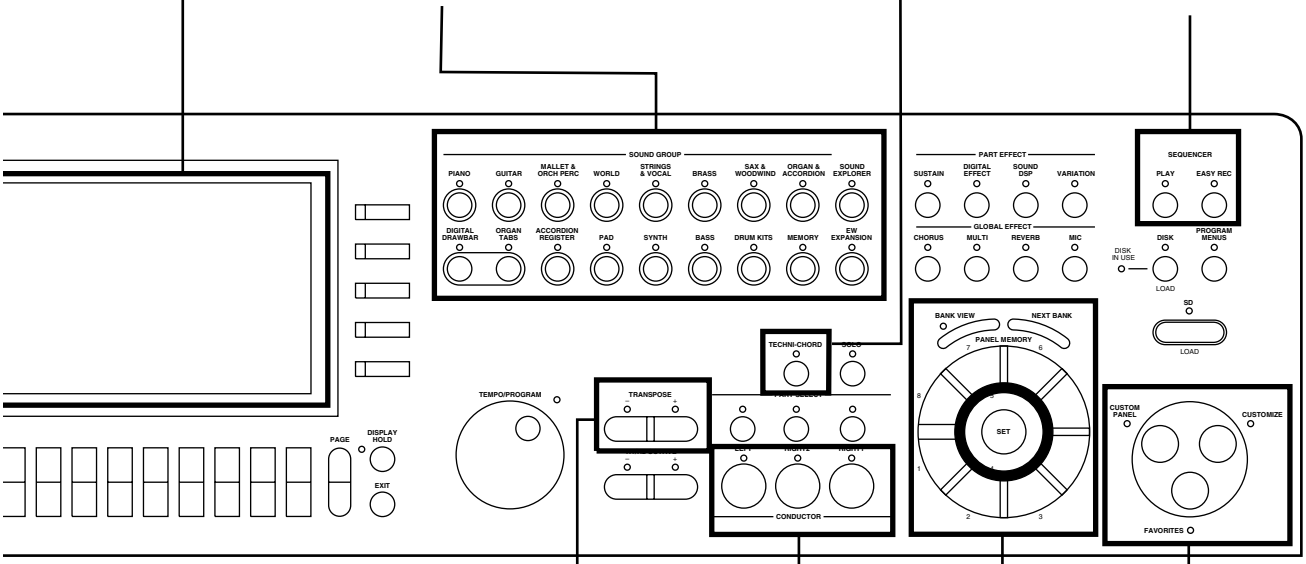

TRANSPOSE
Raise or lower the key of the entire keyboard.

CONDUCTOR
Assign a different sound to each part, then assign the desired parts to sections of the keyboard.

FAVORITES
You can record four different special displays of your favorite sounds and rhythms, functions, etc.

PANEL MEMORY
Store the panel settings, then recall them instantaneously just by pressing a button or two.

Initialize

This Keyboard has many settable functions and storable memories. However, you can return the settings and memory to the factory-preset status.

INITIAL

1. Press the **PROGRAM MENUS** button to turn it on.

- The display changes to the following.

2. Select CONTROL.
   - The display looks similar to the following.

3. Select INITIAL.
   - This display changes to the following.

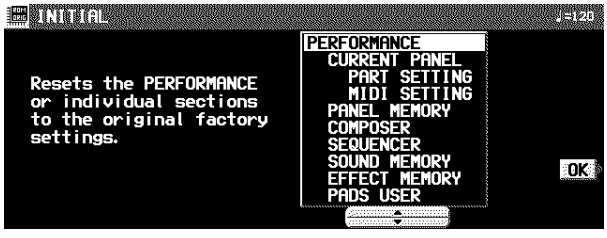

4. Use the ▲ and ▼ buttons to select the desired type of initialization.
   - PERFORMANCE includes all the items which are listed below it.

5. Press the OK button.
   - The display changes to the confirmation display. Press the YES button if you wish to execute the initialization. Press the NO button if you wish to cancel the procedure.

   - Initialization begins. When initialization is completed, “COMPLETED!” is shown on the display and the Keyboard returns to the normal performance mode.
   - The USER MIDI, FAVORITES, HOME PAGE settings and CUSTOM styles are not initialized by this procedure.

You can also reset all the PERFORMANCE items with the following procedure:
Turn off the power to this instrument once. Then, while pressing the three lower left buttons in the **RHYTHM GROUP** section (**60’s & 70’s**, **MODERN DANCE** and **SOUL & R&B**) at the same time, turn the power on again.

About the backup memory and performance data

When the power to this instrument is turned off, the various settings and memory contents of this instrument are maintained in the backup memory as follows:

PERFORM-ANCE	CURRENT PANEL settings	about one week
	PANEL MEMORY	
	SEQUENCER	about 80 minutes
	COMPOSER (MEMORY contents)	
	PERFORMANCE PADS (USER memories)	
	SOUND MEMORY	about one week
	EFFECT MEMORY	
BACKUP	USER MIDI (USER memories for the MIDI PRESETS)	indefinitely
	FAVORITES	
	HOME PAGE	
	ALL CUSTOM STYLE	

- If you wish to retain the settings and stored memory contents for recall at a later time, store the desired data on a disk/SD card.
- The backup memory does not function for the stored contents until the power has been on for about 10 minutes.
- Data from previous Technics models may be limited to PERFORMANCE data.

Separately sold options

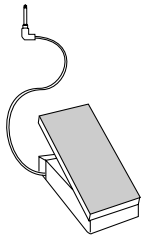

SZ-E2
Expression Pedal

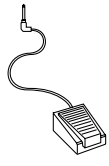

SZ-P1
Foot Switch

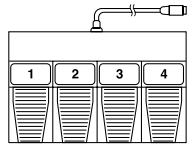

SZ-FC2
Foot Controller

- Be sure to turn off the power before connecting the Foot Controller.

PLUG-IN feature
This model is compatible with third-party extension plug-in software for the **KN7000**. See plug-in documentation for information about software features and operation.

Terminals

Back panel terminals

(Left side)

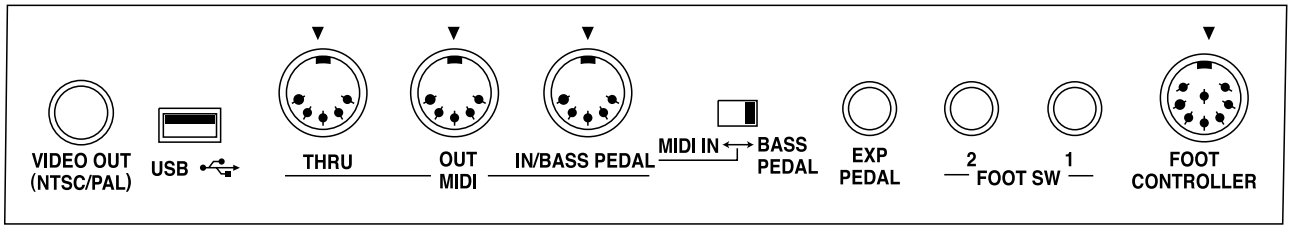

VIDEO OUT
The display images or lyrics when playing songs, and the image of the display are output through this terminal.

- The output mode (**NTSC/PAL**) can be selected.

USB
This terminal allows connection to a personal computer with a USB cable (commercially available type AB cable).
Used with the applications on the included CD-ROM, you can record this instrument's audio sound or manage the instrument data with your PC.

- **Applications**
  Audio Recorder:
  Application for Recording this instrument's sounds and for saving recorded digital audio files in WAV, WMA (Windows Audio Format) and MP3 formats.
  Song Manager:
  Application for managing this instrument's data on your PC by means of a USB cable.

MIDI
These terminals are for connection to another MIDI instrument.

MIDI IN/BASS PEDAL
Set this switch to **BASS PEDAL** to connect a commercially available MIDI pedal unit. The MIDI input signal from the MIDI pedal unit is received by the BASS PEDAL part regardless of the part setting on the pedal (OMNI ON), and the instrument generates the sound assigned for that part.

- When the switch is set to **BASS PEDAL**, this instrument's MIDI input settings are not effective. If MIDI input settings are necessary, turn off the power, set this switch to MIDI IN, and turn the power on again.
- For more information concerning the sound setting for the BASS PEDAL part .

EXP PEDAL
The optional SZ-E2 Expression Pedal (sold separately) can be connected to this terminal to control the volume.

FOOT SW 1, 2
An optional SZ-P1 Foot Switch (sold separately) can be connected to each terminal to control various functions.

FOOT CONTROLLER
An optional SZ-FC2 Foot Controller (sold separately) can be connected to this terminal to control various functions.

(Right side)

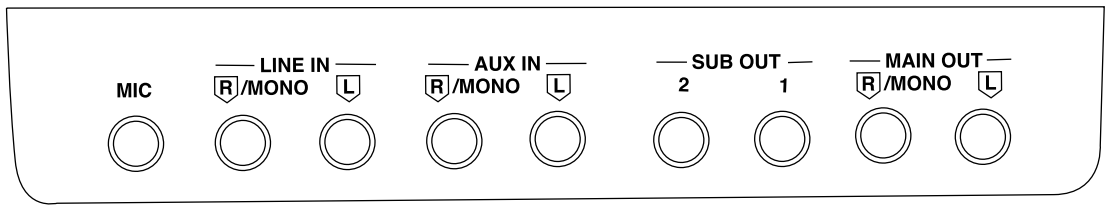

MIC
A microphone can be connected to this terminal.

LINE IN
This terminal receives input signals from an external instrument. To receive a monaural signal, connect to the **R/MONO** terminal.

- The input signal volume can be adjusted using the **LINE IN VOLUME** controller on the control panel unit.

AUX IN
This terminal receives input signals from an external instrument. To receive a monaural signal, connect to the **R/MONO** terminal.

- The input signal volume is not affected by the instrument's **MAIN VOLUME** setting.

SUB OUT
The sounds from desired parts can be output independently from those terminals.

MAIN OUT
The total sound of this instrument can be output from this terminal.

■ Block diagram

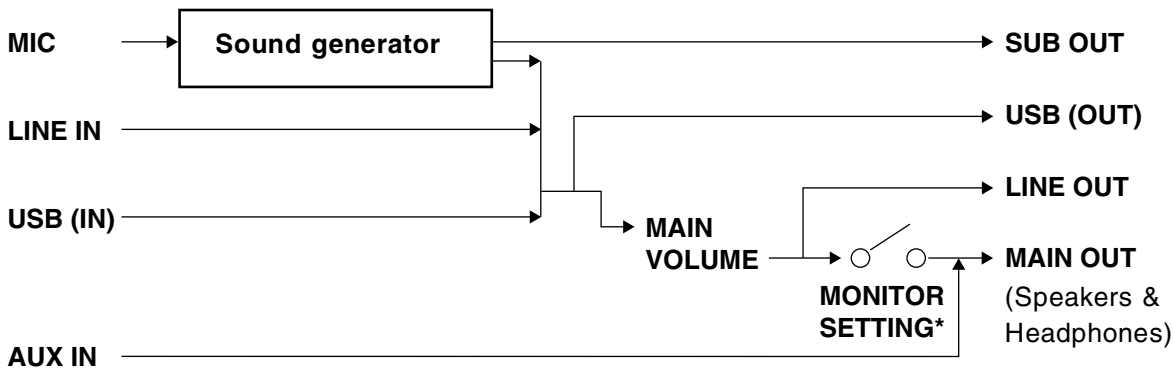

* MONITOR SETTING

Symptoms which appear to be signs of trouble

The following changes in performance may occur in the Technics Keyboard but do not indicate trouble.

	Phenomenon	Remedy
Sounds and effects	The buttons, keys, etc. malfunction.	▪ Turn off the **POWER** button once, then turn it on again. If this procedure is not successful, turn off the **POWER** button once. Then, while pressing the three lower left buttons in the **RHYTHM GROUP** section (**60's & 70's**, **MODERN DANCE** and **SOUL & R&B**) at the same time, turn the **POWER** button on again. (Note that, in this case, all programmable settings, functions and memories return to their factory-preset status.)
	No sound is produced when the keys are pressed.	▪ The **MAIN VOLUME** is at the minimum setting. Adjust the volume with the **MAIN VOLUME** control. ▪ The volumes for the selected parts are set to the minimum levels. Use the balance buttons to set the volumes of the relevant parts to appropriate levels. ▪ The part is muted. ▪ The LOCAL CONTROL for a part performed on the keyboard is set to OFF. Set the LOCAL CONTROL to ON.
	Only percussive instrument sounds are produced when the keyboard is played.	▪ In the **SOUND GROUP** section, the **DRUM KITS** button is on.
	The volume is very low when the keyboard is played.	▪ The volume setting in the **SEQUENCER** contents is very low. Follow the INITIAL procedure to reset the settings.
	The sound you hear is different from the sound you selected.	▪ This sometimes occurs when you play back **SEQUENCER** or **COMPOSER** data which was created on a different model, or when MIDI data is received from a connected instrument. Select the desired sounds again.
Rhythm	The rhythm does not start.	▪ The **DRUMS** volume is set to the minimum level. Use the balance buttons to set the **DRUMS** volume to an appropriate level. ▪ A **SEQUENCER PLAY** button is on. When you are not playing back the **SEQUENCER** performance, turn off the **SEQUENCER PLAY** button. ▪ CLOCK is set to MIDI. Set CLOCK to INTERNAL.
AUTO PLAY CHORD	No sound is produced for the automatic accompaniment, or only the sounds of some parts are produced.	▪ An **ACCOMP** part does not sound if its corresponding volume is set to the minimum level. Use the respective balance buttons to set the **ACCOMP 1**–**5** volumes to appropriate levels.
SEQUENCER	Storage is not possible.	▪ The remaining memory capacity of the **SEQUENCER** is 0. Follow the SONG CLEAR or TRACK CLEAR procedure to erase the memory.
	The playback measure indication is different from when the performance was recorded.	▪ The number of measures corresponds to the time signature of the rhythm selected at the start of recording. To change the rhythm in the middle of the song, record the rhythm change in the RHYTHM part.

	Phenomenon	Remedy
COMPOSER	Storage is not possible.	▪ The remaining memory capacity of the **COMPOSER** is 0.
	Setting the time signature is not possible.	▪ The time signature cannot be changed for a pattern which is currently recorded in the **COMPOSER**. If you wish to change the time signature, first follow the procedure to clear the memory.
	The playback timing of the rhythm pattern is different from the timing with which it was recorded.	▪ The QUANTIZE function was on when the pattern was recorded and the timing was automatically corrected. Set the quantize level to a smaller note unit or to OFF when recording.
Disk/SD card	The Disk Drive produces a noise during recording or playback.	▪ This occurs when the Disk Drive is reading a disk. It does not indicate a problem.
	When the procedure to load from a disk/SD card is performed, the contents of the keyboard memory are erased.	▪ When performing the load operation from a disk\SD card, the keyboard memory changes to that of the data loaded from the disk. If you wish to preserve a song which is stored in the keyboard memory, save it on a disk/SD card before performing the load procedure.
MIDI	Data cannot be exchanged through MIDI terminals.	▪ Match the channels on the transmitting side and the receiving side.
	The sound quavers or is distorted.	▪ When the **USB** terminal or both the **MIDI IN** and **OUT** terminals are connected to a computer, depending on the computer software the received data may be sent back to the instrument just as it is. Because of this the sound generated from the keys and the sound generated from the returned data are both produced, causing undesirable effects, such as the sounds canceling each other out, for example. In this case, either change the software settings to prevent received data from being returned, or set the MIDI LOCAL CONTROL to off.
Other	Noise from a radio or TV can be heard.	▪ This sometimes occurs when electrical equipment such as a radio or TV is used near the instrument. Try moving such electrical equipment further away from the instrument. ▪ The sound may be coming from a nearby broadcast station or amateur radio station. If the sound is bothersome, consult your dealer or service center.
	The cabinet becomes warm during use.	▪ This instrument has a built-in power source that heats the cabinet to some degree. This is not an indication of trouble.

Error messages

No.	Contents
00	The data on the disk that you are using is for a different product.
01	An error has occurred while the disk was loading. Please try again!
02	There is no disk in the Disk Drive.
03	The file that you tried to load is empty.
05	An error has occurred while the disk was saving. Please try again!
06	The disk that you are using is write protected. Please remove the write protection and try again.
07	The disk that you are using is full. Please use another disk.
08	An error has occurred while the disk was formatting. The disk that you are using may be faulty. Please try formatting another disk.
10	The data is already copy protected.
15	The song you are trying to save is empty.
16	This STANDARD MIDI FILE is incompatible with this instrument and cannot be loaded.
17	This is not a STANDARD MIDI FILE.
18	The timebase (PPQ resolution) that you tried to load is not 24/48/96/192/288/384 PPQ.
20	A problem has occurred with your **SEQUENCER** Data. This might be due to a damaged or faulty disk.
21	Memory full
22	It is necessary to press REC STOP to complete this procedure.
23	It is impossible to change the time signature because it has already been set in the existing tracks.
24	A rhythm track already exists. It is impossible to assign two tracks to rhythm.
25	It is only possible to change the velocity on a melody track.

No.	Contents
26	It is only possible to merge melody tracks. Tracks such as rhythm, chord and control cannot be merged.
27	It is only possible to copy melody tracks. Tracks such as rhythm, chord and control cannot be copied.
28	This song is too long to be saved as a MIDI file.
29	The MIDI file that you have tried to load exceeds the memory capacity of this instrument and cannot be played. The **SEQUENCER** memory has been cleared.
30	It is not possible to change the time signature of a **COMPOSER** pattern after it has been recorded. If you want to proceed, you must first clear the entire **COMPOSER** pattern.
31	The time signature of the pattern from which you are copying is different from the **COMPOSER** memory that you are using. Either: Change the time signature of the **COMPOSER** memory or: Copy from a pattern that has the same time signature
32	Memory full
33	Select a Track before setting parameters for AUTO PUNCH RECORD.
43	The file that you are trying to load was saved on a previous KN keyboard. It is only possible to load using the “PERFORMANCE” option.
44	It is impossible to edit a Drum Kit. Please select a different sound from any group except Keyboard Percussion.
46	It is only possible to insert MELODY Tracks. Tracks such as RHYTHM, CHORD and CONTROL cannot be inserted.
47	This procedure is not possible with a composer pattern or the metronome. Please select a preset rhythm pattern.
54	It is not possible to record using preset banks, compile banks, or control banks. Please select one of the user banks.

No.	Contents
55	Special tracks such as CHORD (APC), RHY and CTL exist in the song from which you are copying and are incompatible with the destination song because it is in the GM mode.
56	AUTO PUNCH recording has been unsuccessful because SEQUENCER operation was interrupted before the PUNCH OUT measure was reached.
58	The song that you have tried to load exceeds this instrument's available memory and cannot be loaded. The selected song memory has been cleared.
62	The computer connection is not active because the computer port switch is set to MIDI. Please turn the power off, set the switch to the desired setting and turn the power back on.
63	This Bitmap is in the wrong format for the KN and cannot be loaded. See the Owners Manual for more details.
64	Please select the Panel Memory that you want to name.
65	It is not possible to use the CHORD FINDER in this mode. Please select CHORD FINDER from HOME page or CHORD STEP RECORD page.
66	SOLO pads are special pads which include Chord information. Pleases use SOLO pads when the rhythm and accompaniment is playing.
67	There are no APC or CHORD tracks. Select and APC track or CHORD track, and try again.
68	It is not possible to record directly into the SOLO pads. Record on the SEQUENCER and Copy the melody and chord information into a SOLO pad.
69	It is not possible to delete all measures.
70	It is not possible to insert over 16 measures in a PATTERN.
71	It is not possible to set the start measure to the measures you set to copy.

SCHEMATIC DIAGRAM-1

A MAIN 1/5 CIRCUIT

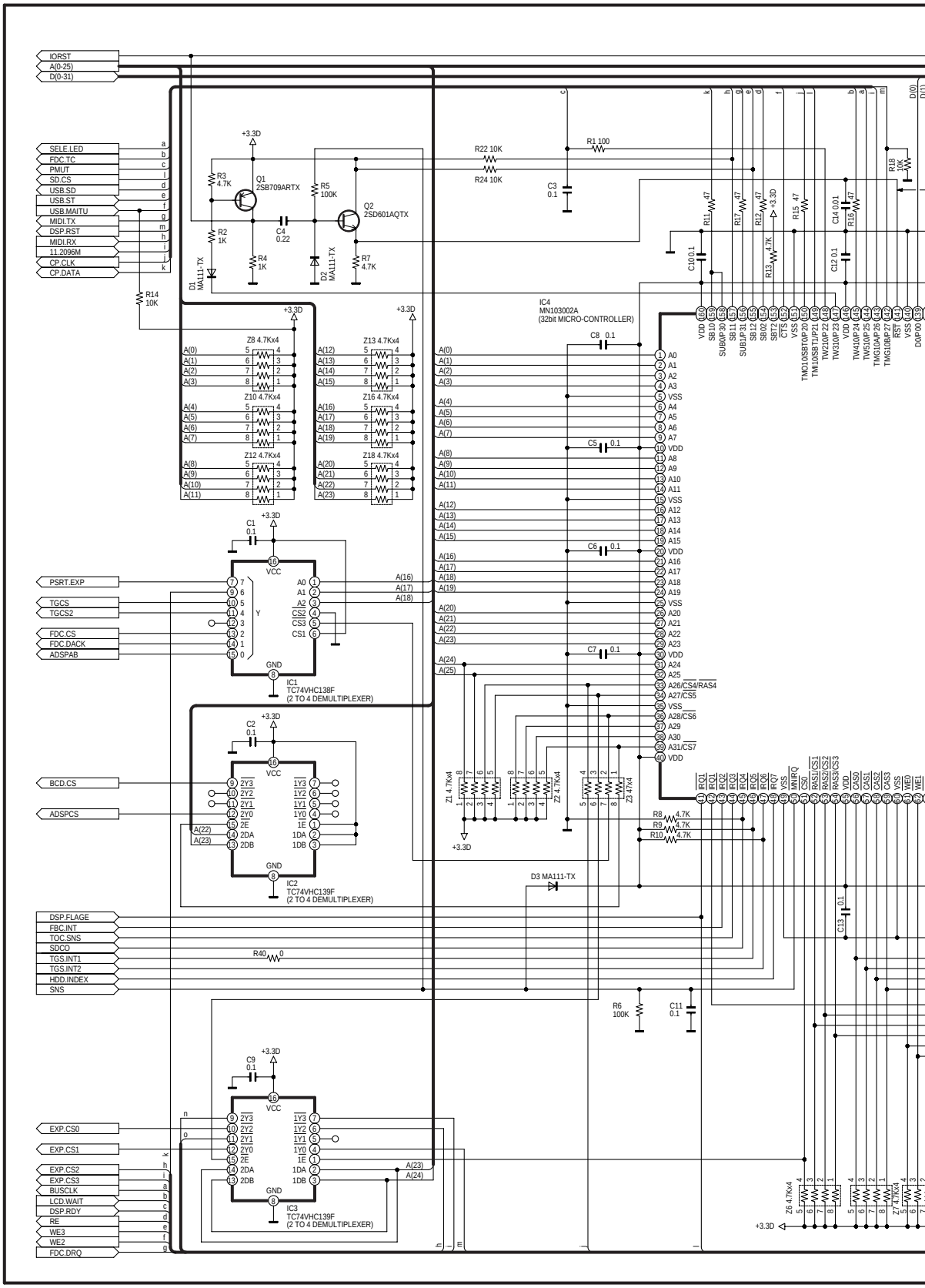

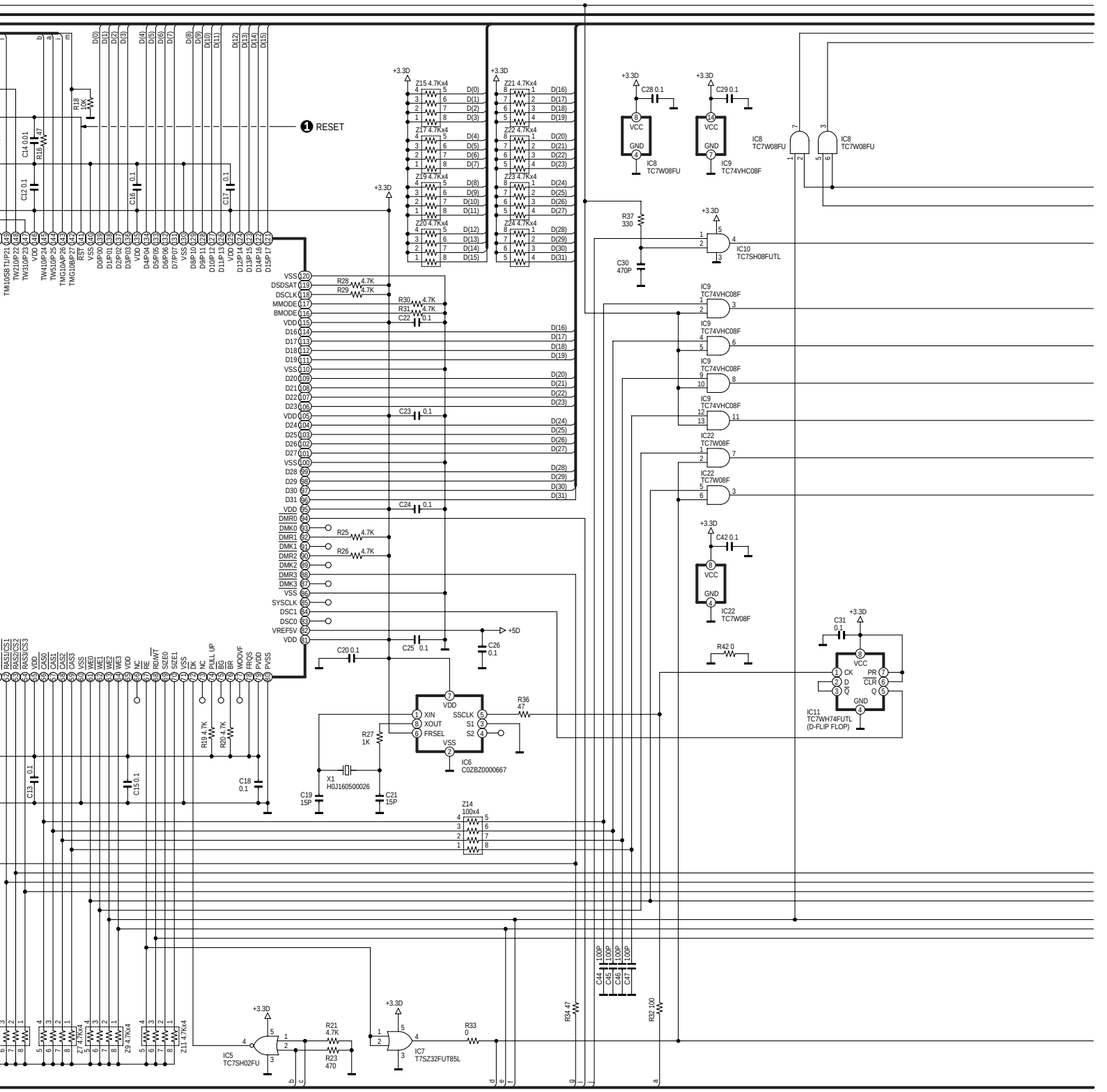

SX-KN7000 MAIN 1/5 SCHEMATIC DIAGRAM (1/2)

SCHEMATIC DIAGRAM-2

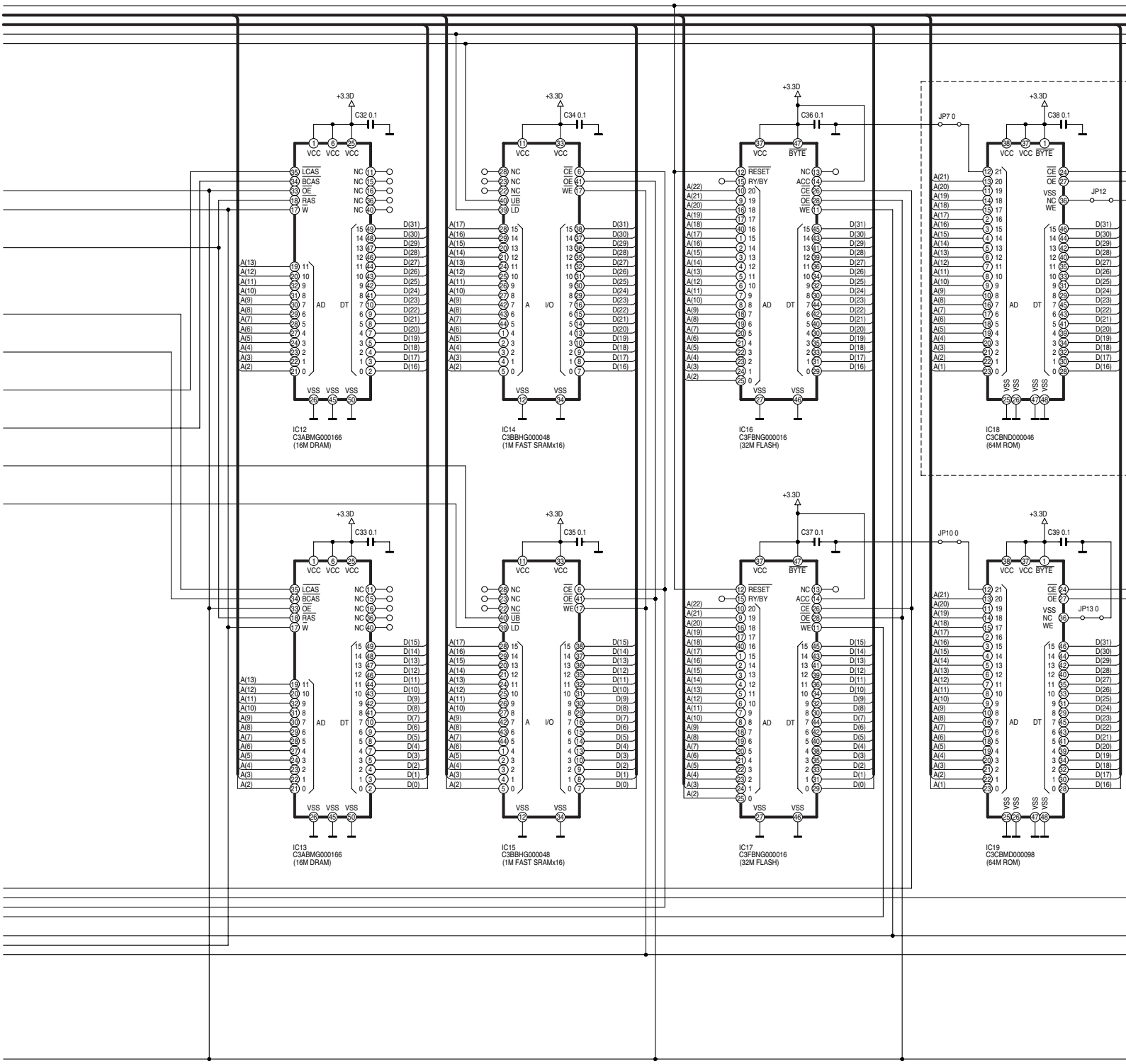

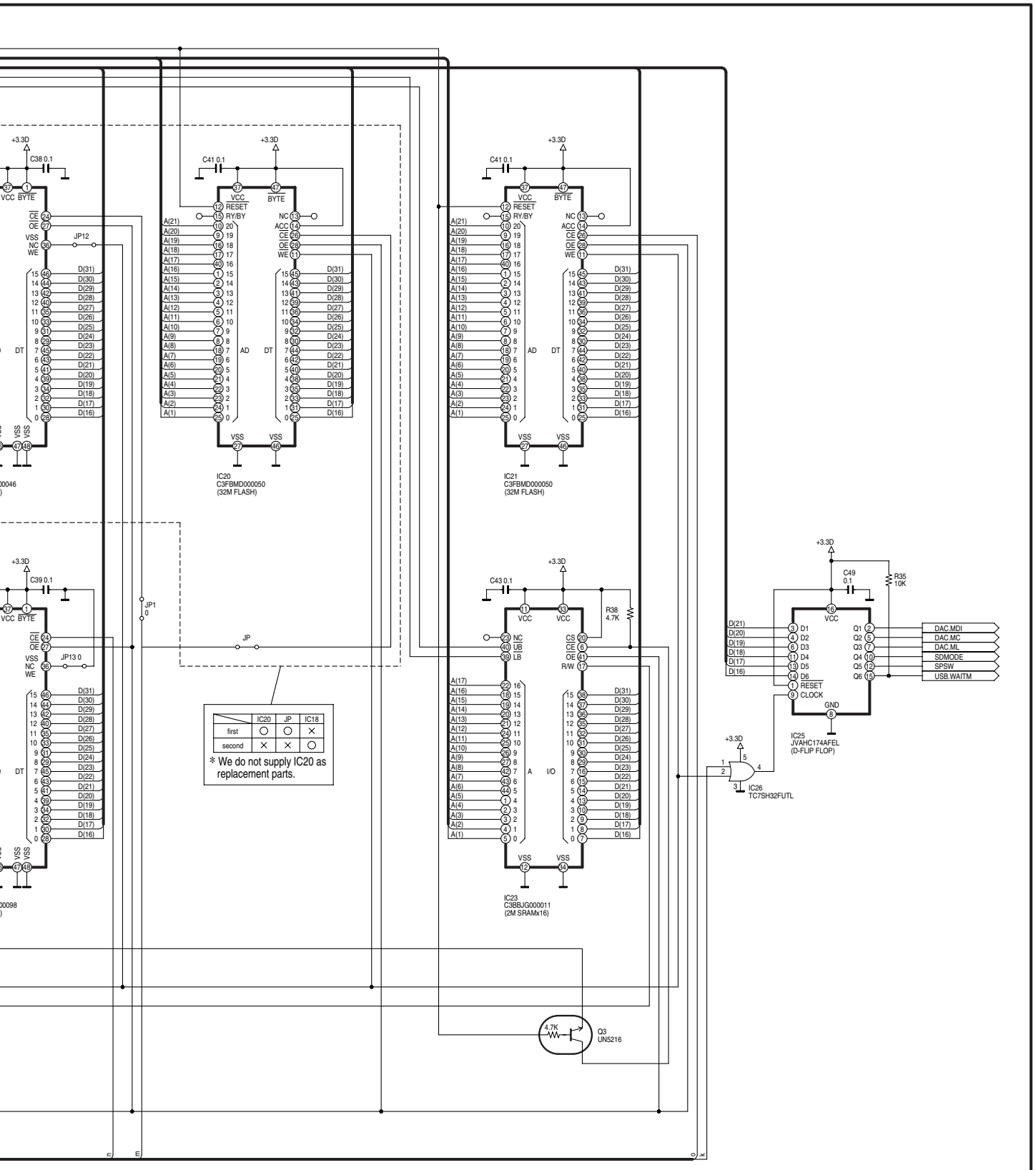

	IC20	JP	IC18
first	○	○	×
second	×	×	○

SX-KN7000 MAIN 1/5 SCHEMATIC DIAGRAM (2/2)

SCHEMATIC DIAGRAM-3

A MAIN 2/5 CIRCUIT

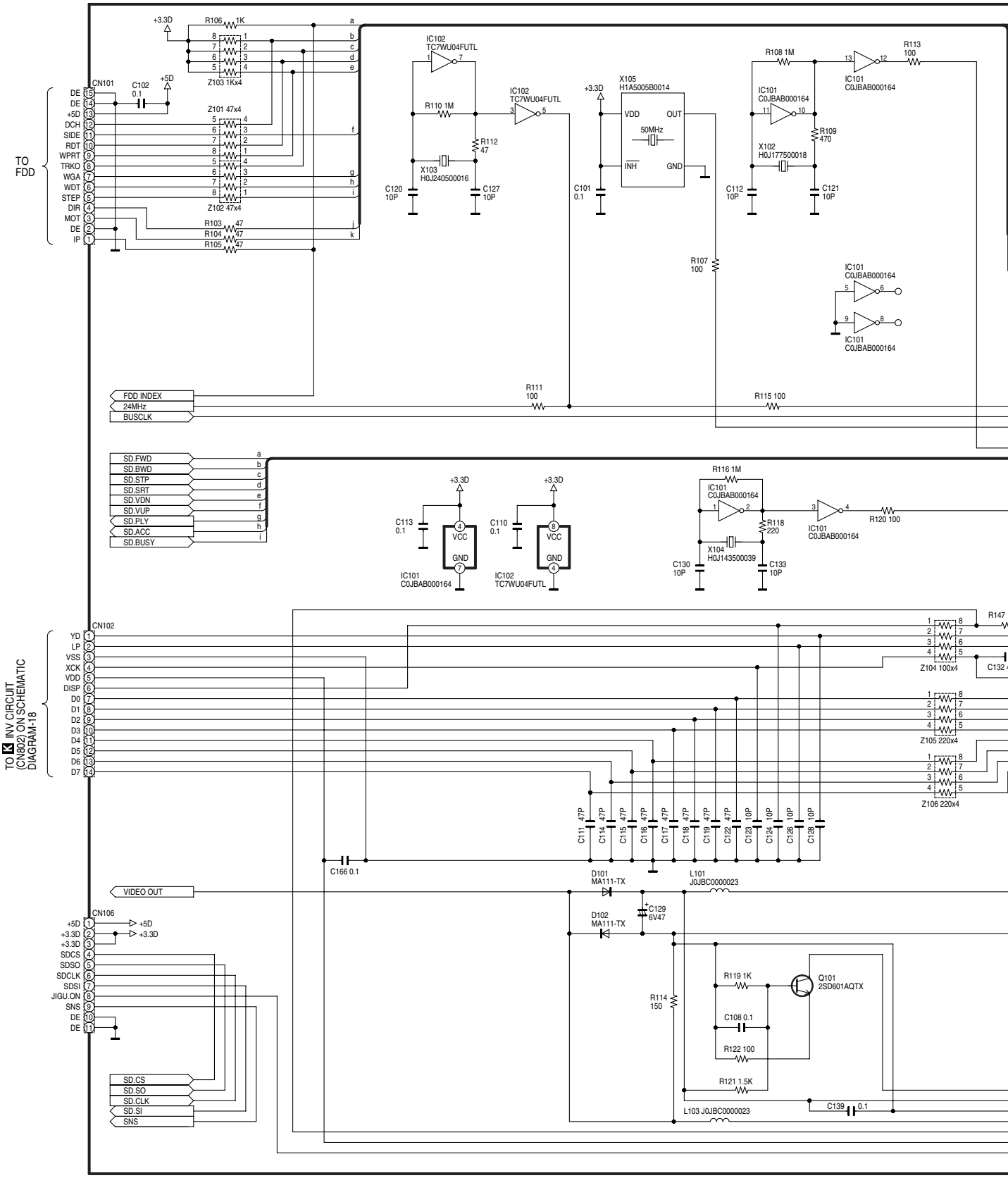

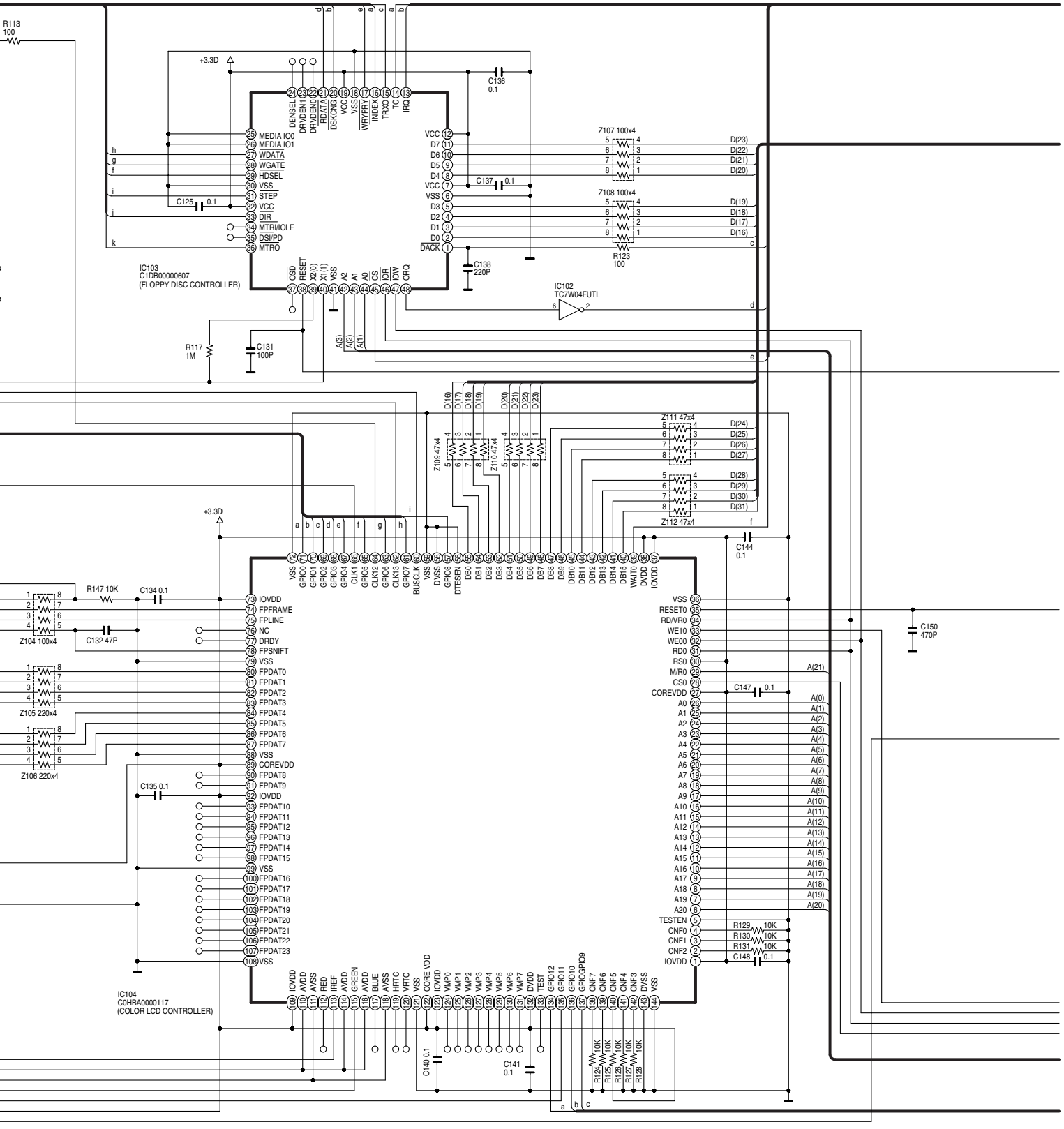

SX-KN7000 MAIN 2/5 SCHEMATIC DIAGRAM (1/2)

SCHEMATIC DIAGRAM-4

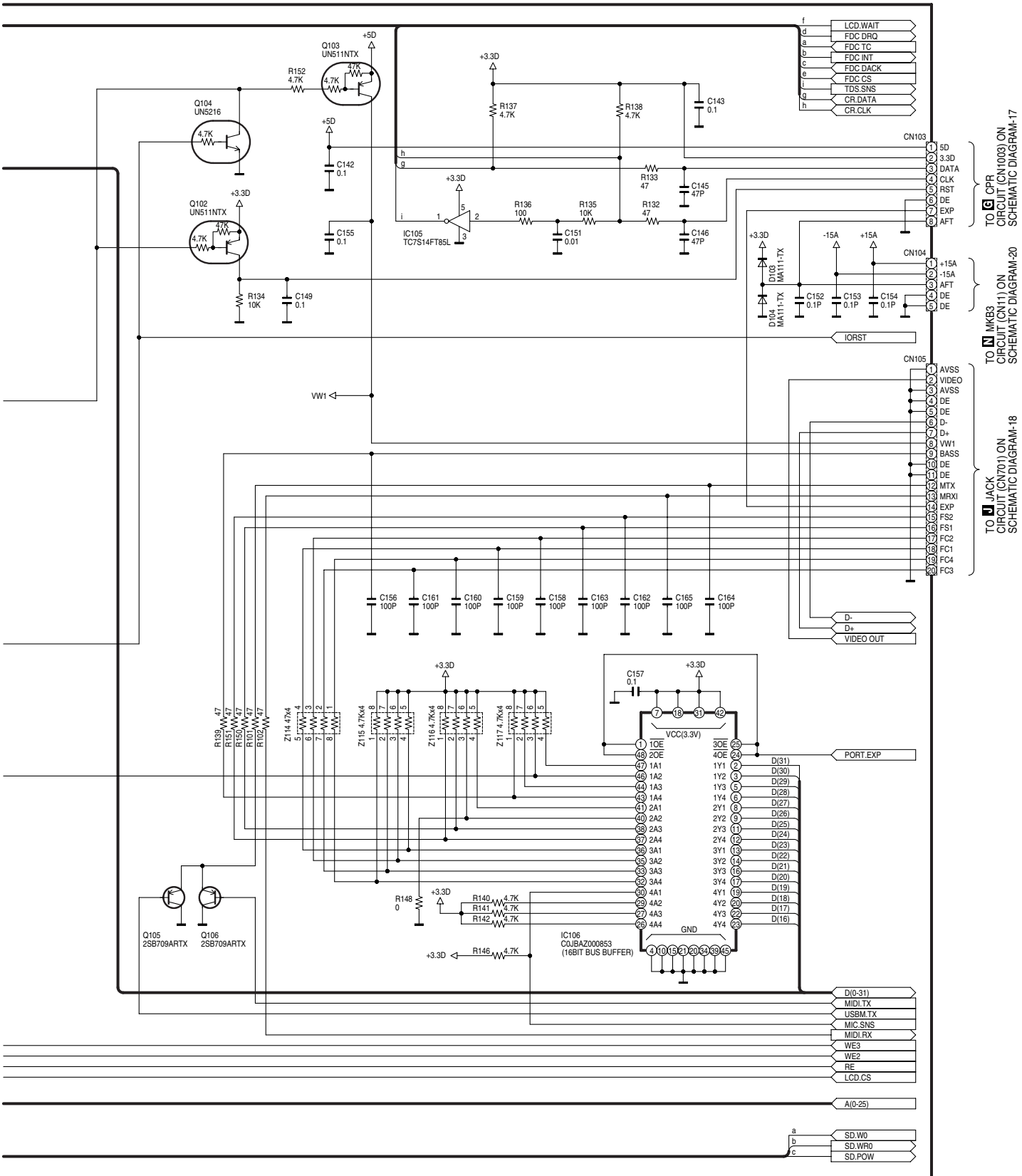

SX-KN7000 MAIN 2/5 SCHEMATIC DIAGRAM (2/2)

TO **G** CPR
CIRCUIT (CN1003) ON
SCHEMATIC DIAGRAM-17

TO **N** MKB3
CIRCUIT (CN11) ON
SCHEMATIC DIAGRAM-20

TO **J** JACK
CIRCUIT (CN7701) ON
SCHEMATIC DIAGRAM-18

SCHEMATIC DIAGRAM-5

A MAIN 3/5 CIRCUIT

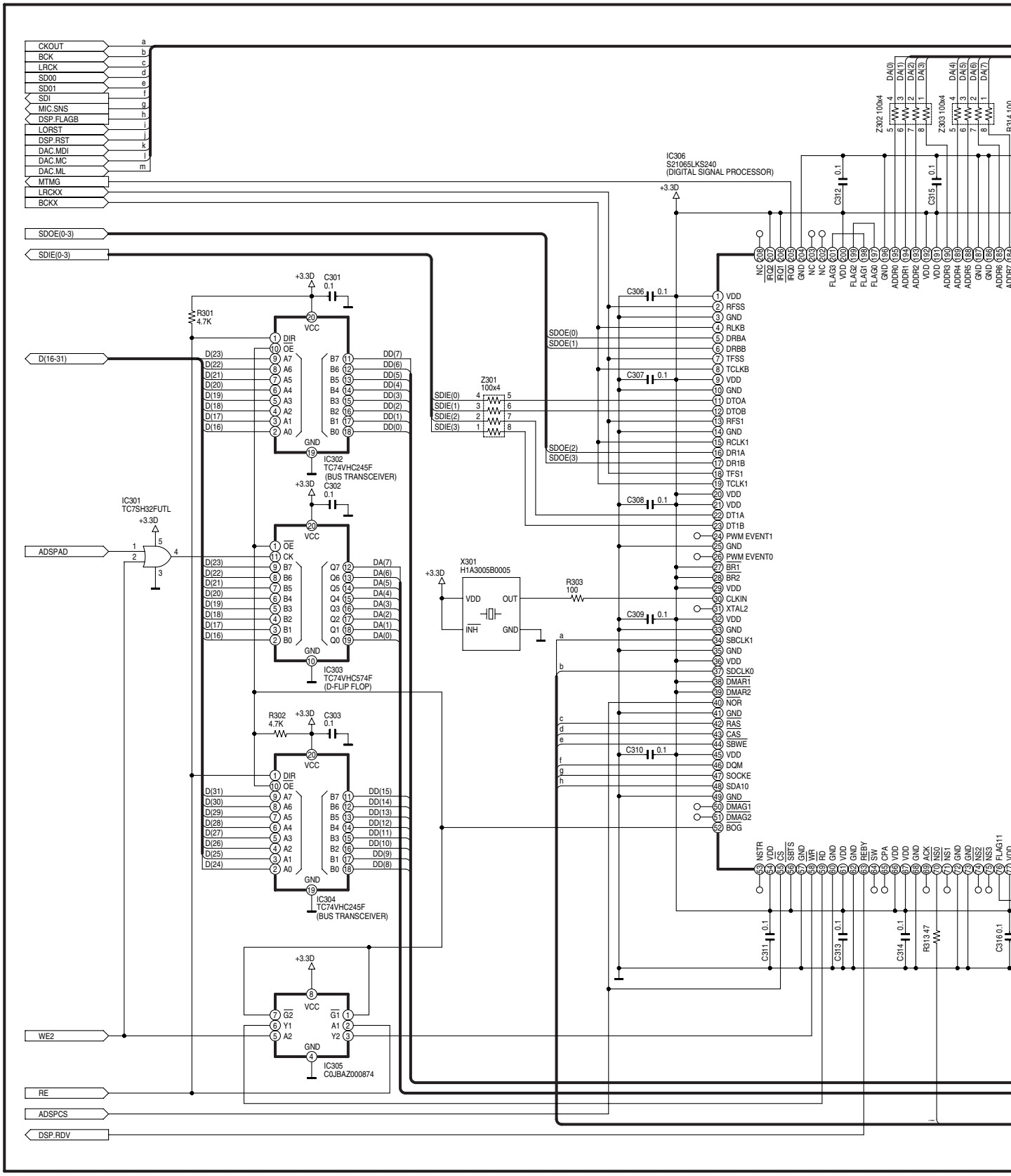

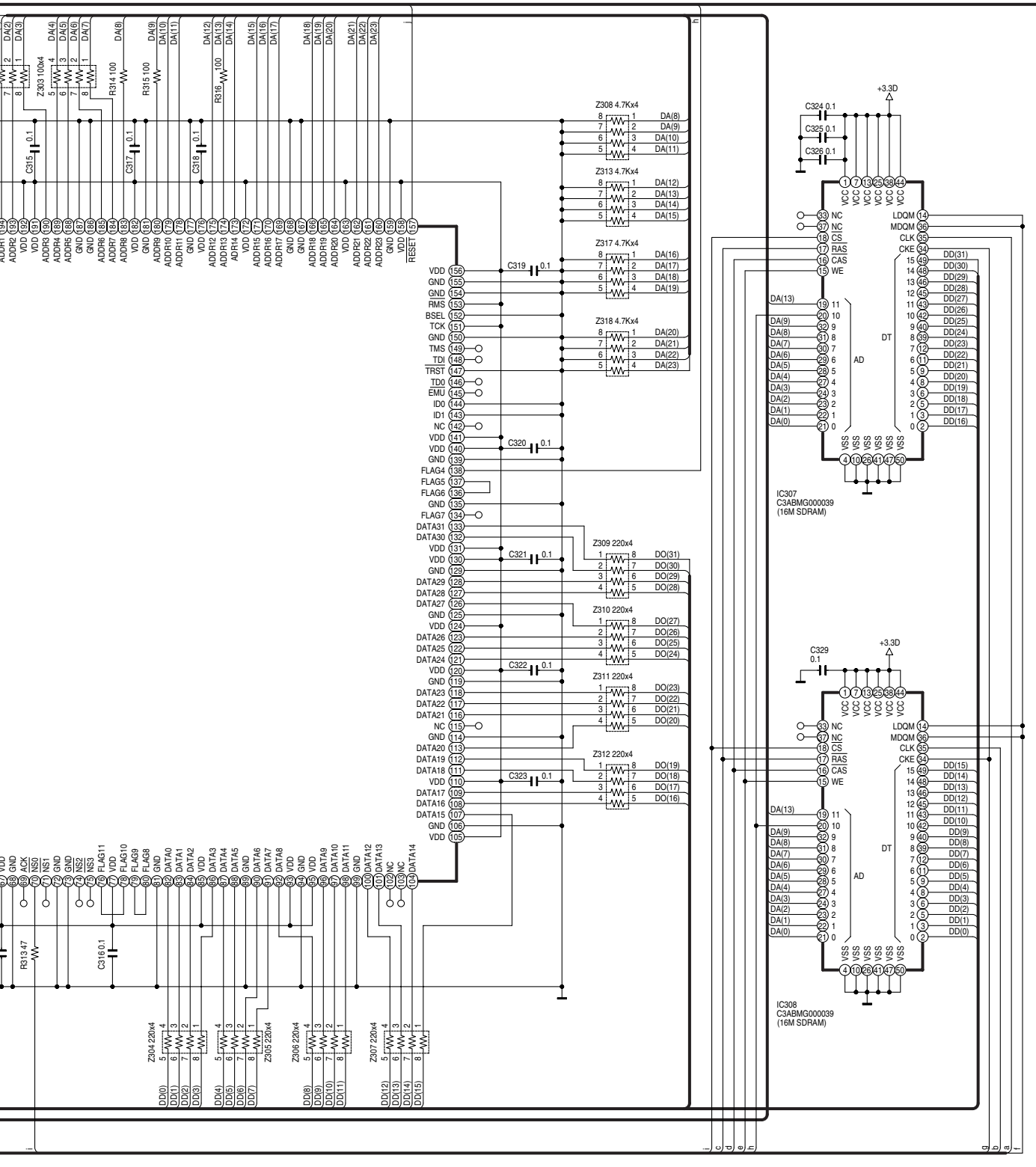
+3.3D
C324 0.1
C325 0.1
C326 0.1
C329 0.1
IC307
C3ABMG000039
(16M SDRAM)
IC308
C3ABMG000039
(16M SDRAM)
AD
DT
VCC
VSS
NC
CS
RAS
CAS
WE
CKE
CLK
LDQM
MDQM

SCHEMATIC DIAGRAM-6

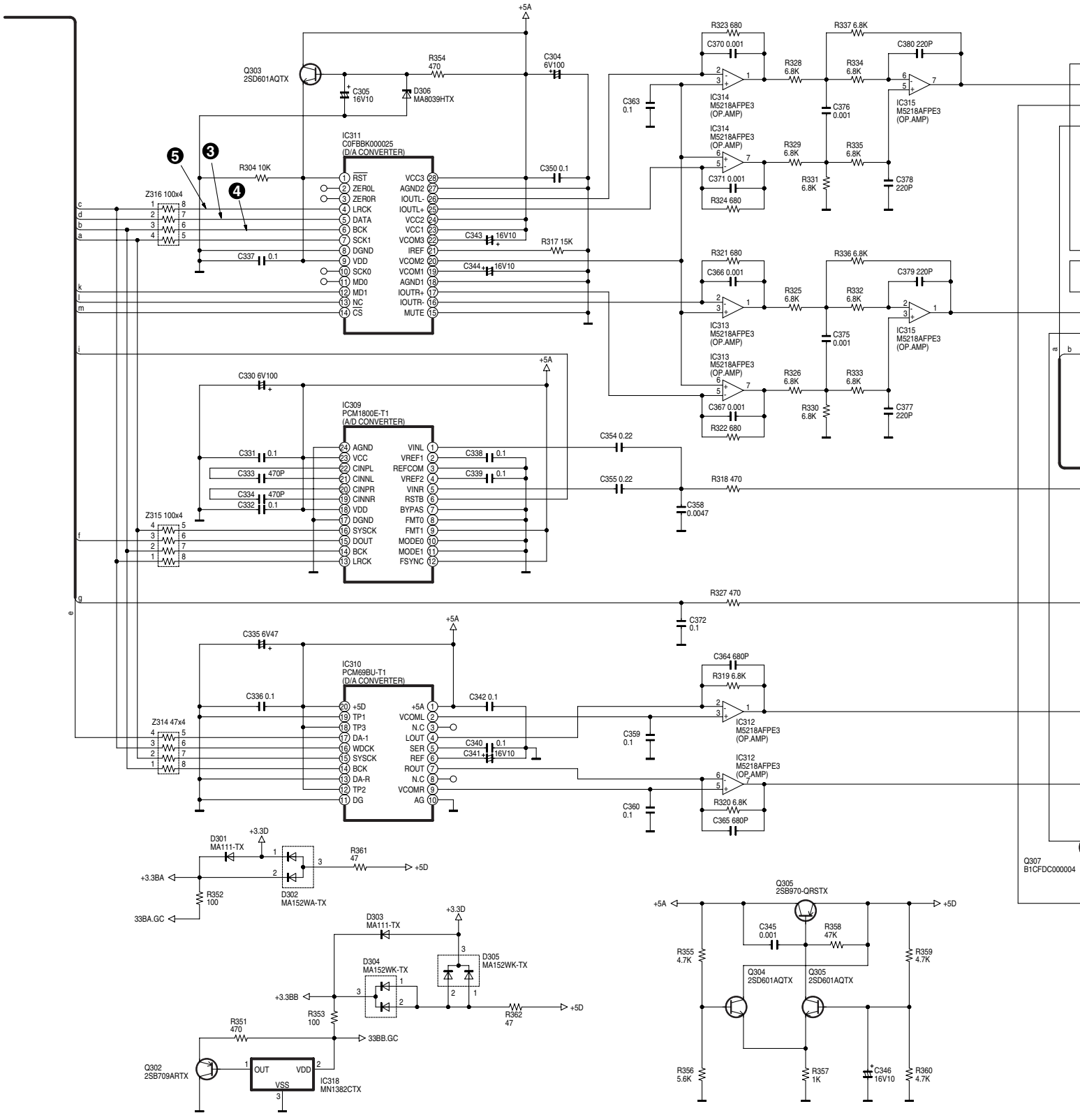

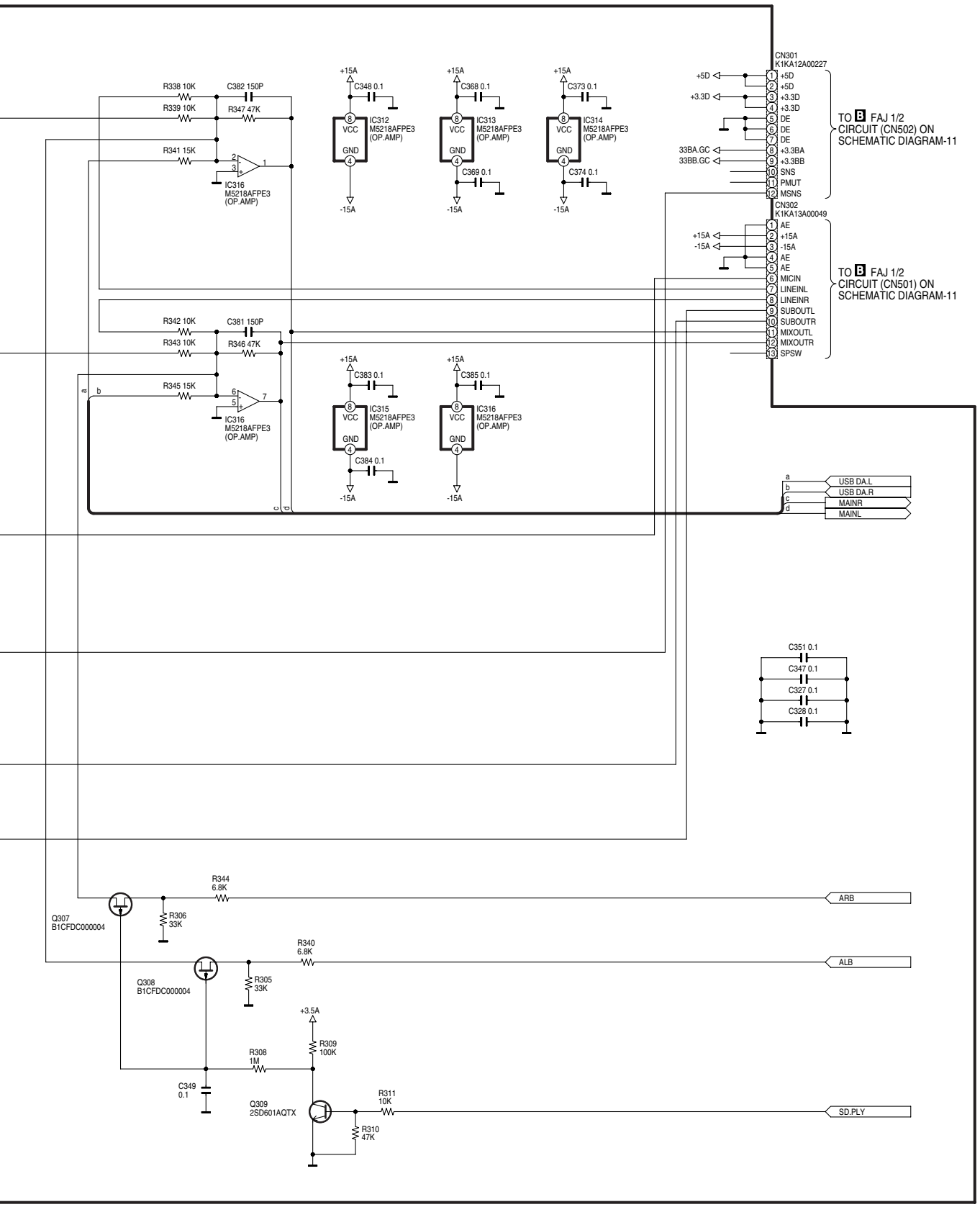

SX-KN7000 MAIN 3/5 SCHEMATIC DIAGRAM (2/2)

SCHEMATIC DIAGRAM-7

A MAIN 4/5 CIRCUIT

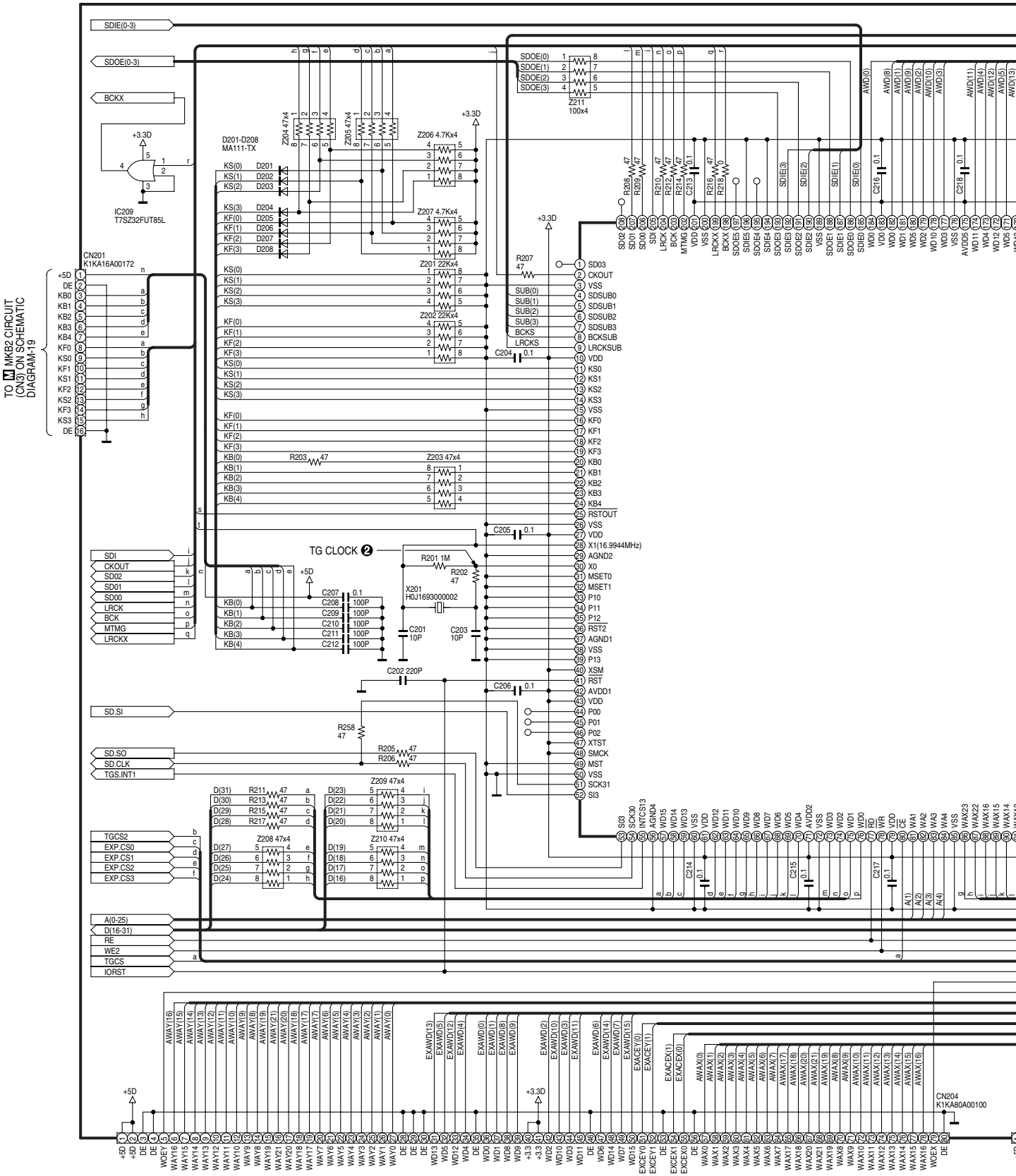

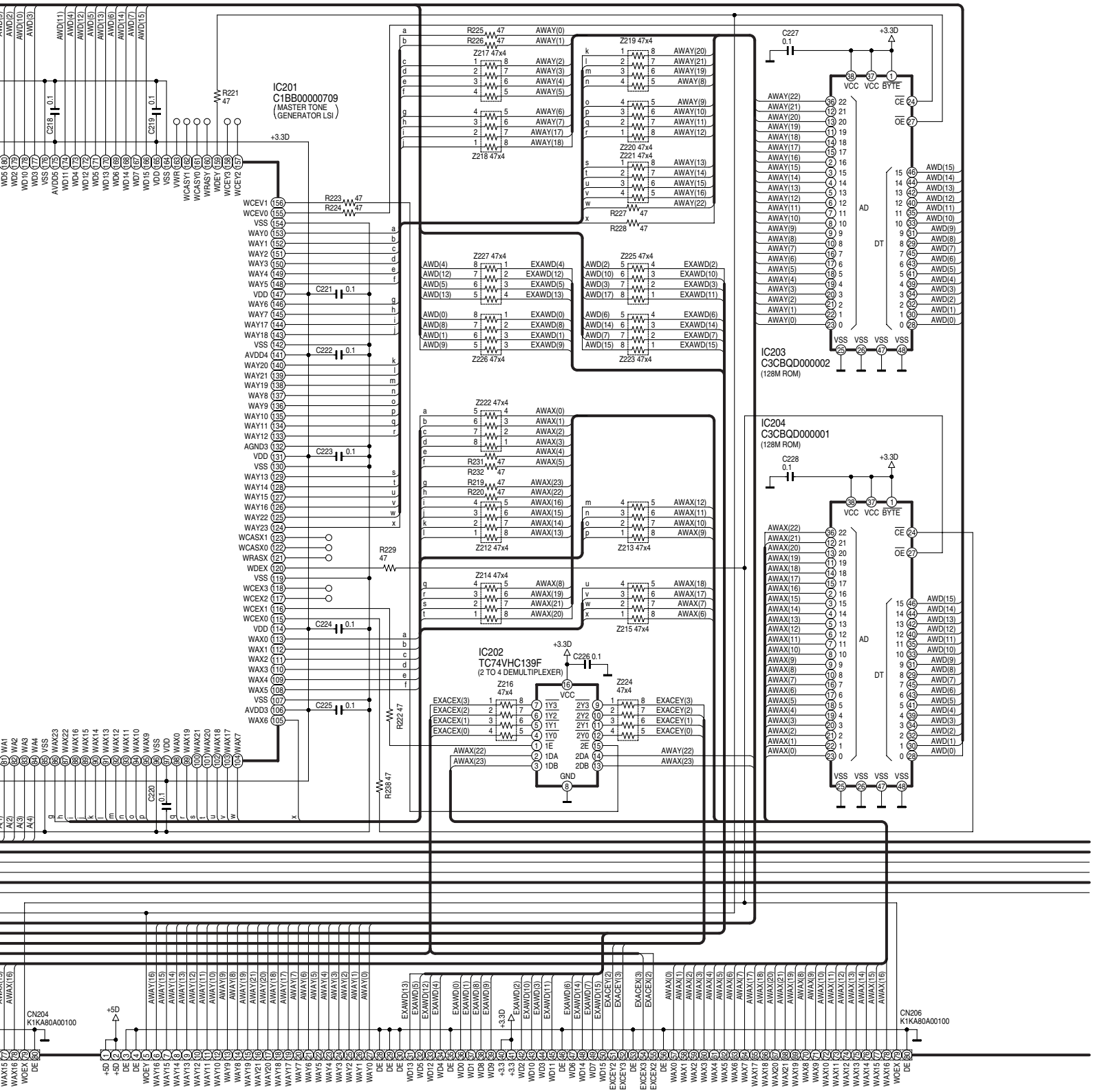

SX-KN7000 MAIN 4/5 SCHEMATIC DIAGRAM (1/2)

SCHEMATIC DIAGRAM-8

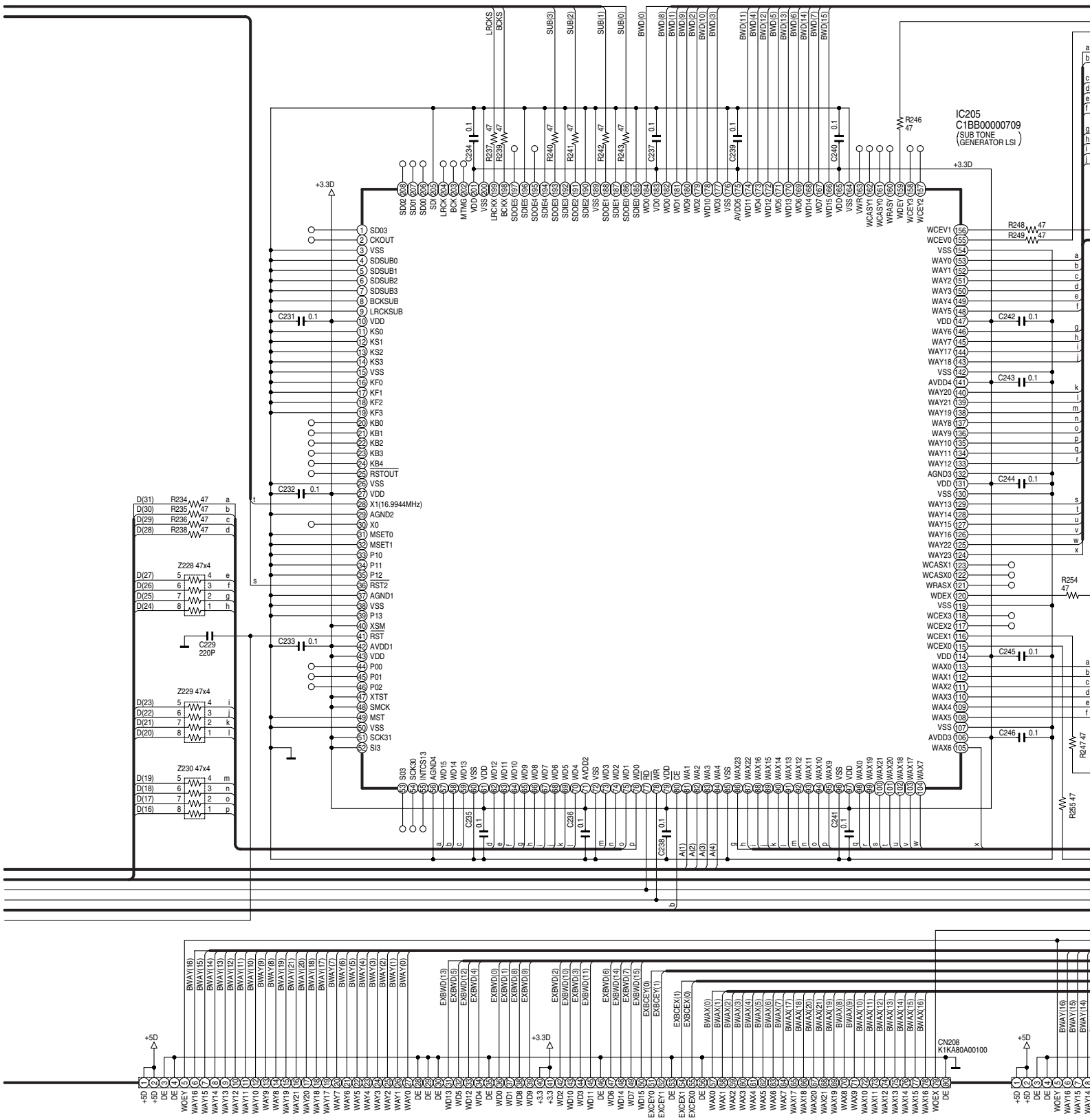

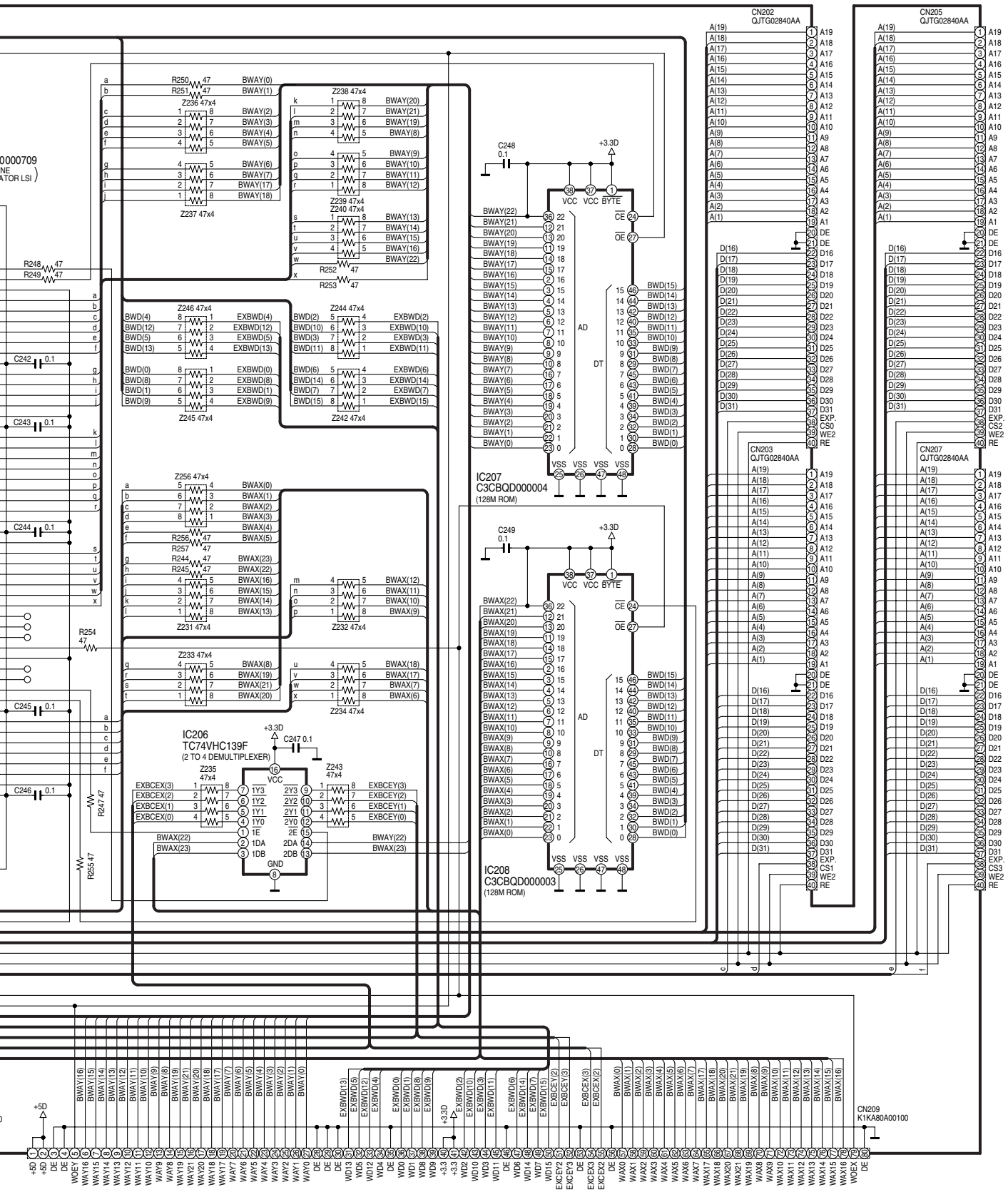

SX-KN7000 MAIN 4/5 SCHEMATIC DIAGRAM (2/2)

SCHEMATIC DIAGRAM-9

A MAIN 5/5 CIRCUIT

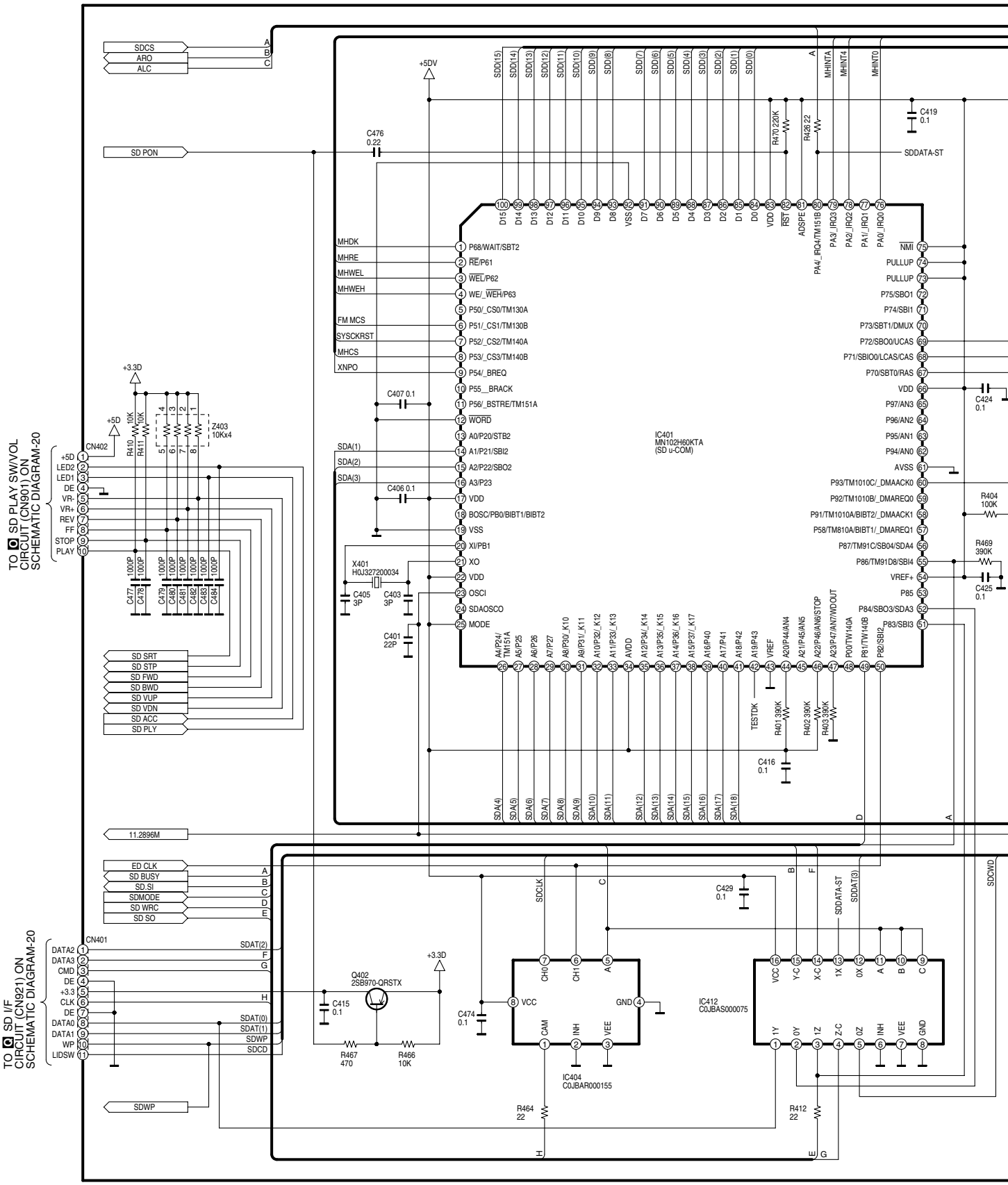

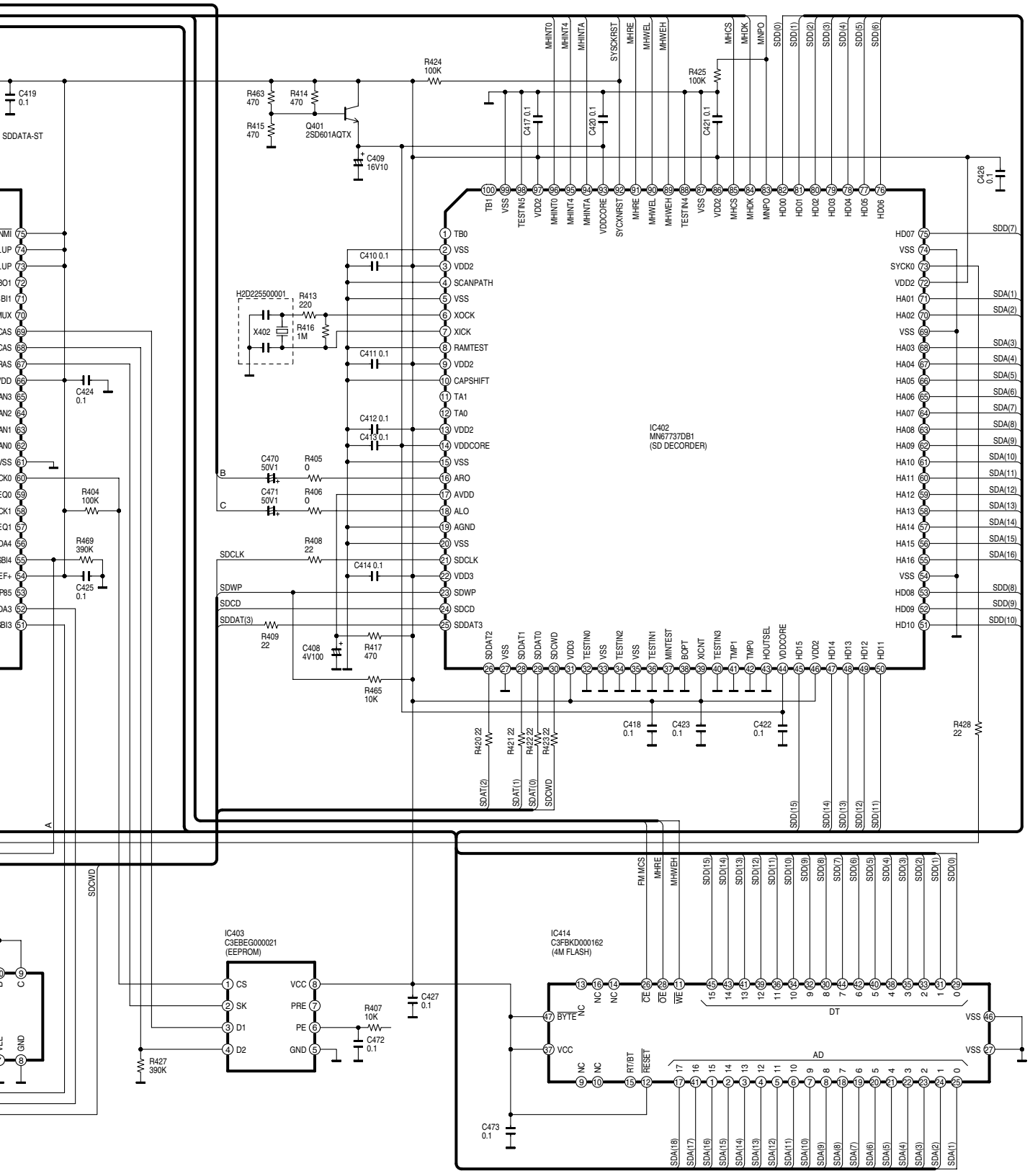

SX-KN7000 MAIN 5/5 SCHEMATIC DIAGRAM (1/2)

SCHEMATIC DIAGRAM-10

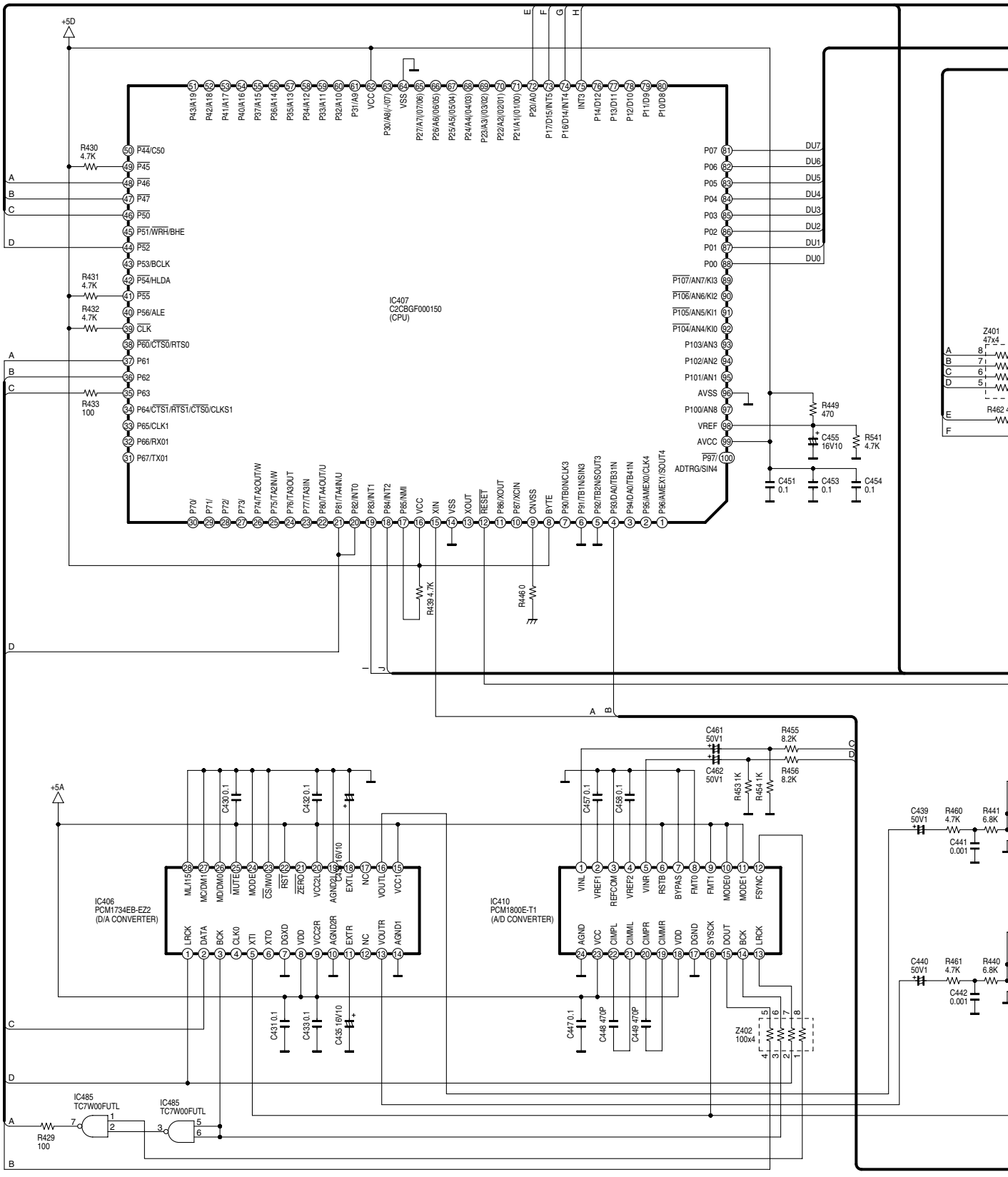

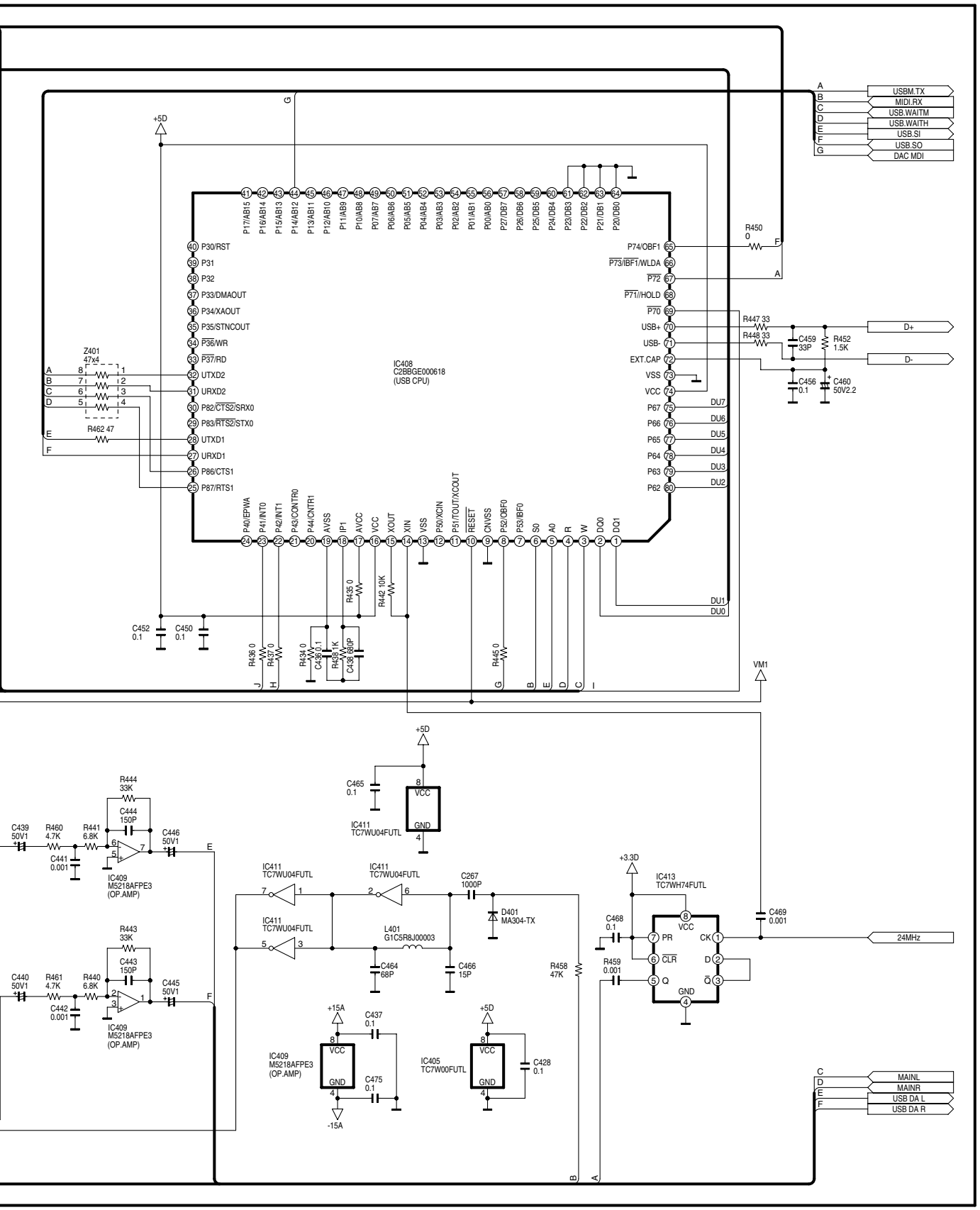

SX-KN7000 MAIN 5/5 SCHEMATIC DIAGRAM (2/2)

SCHEMATIC DIAGRAM-11

B FAJ 1/2 CIRCUIT

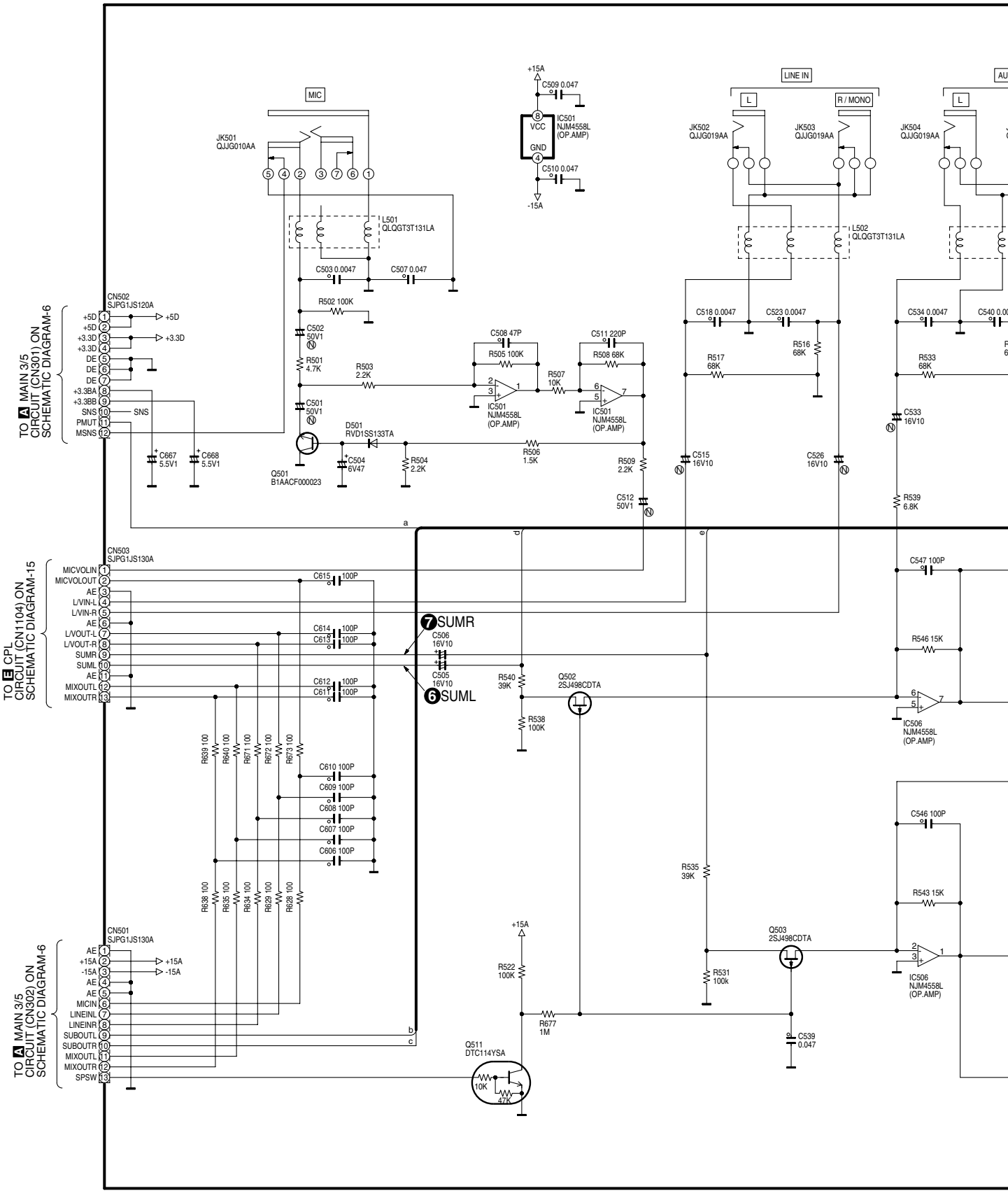

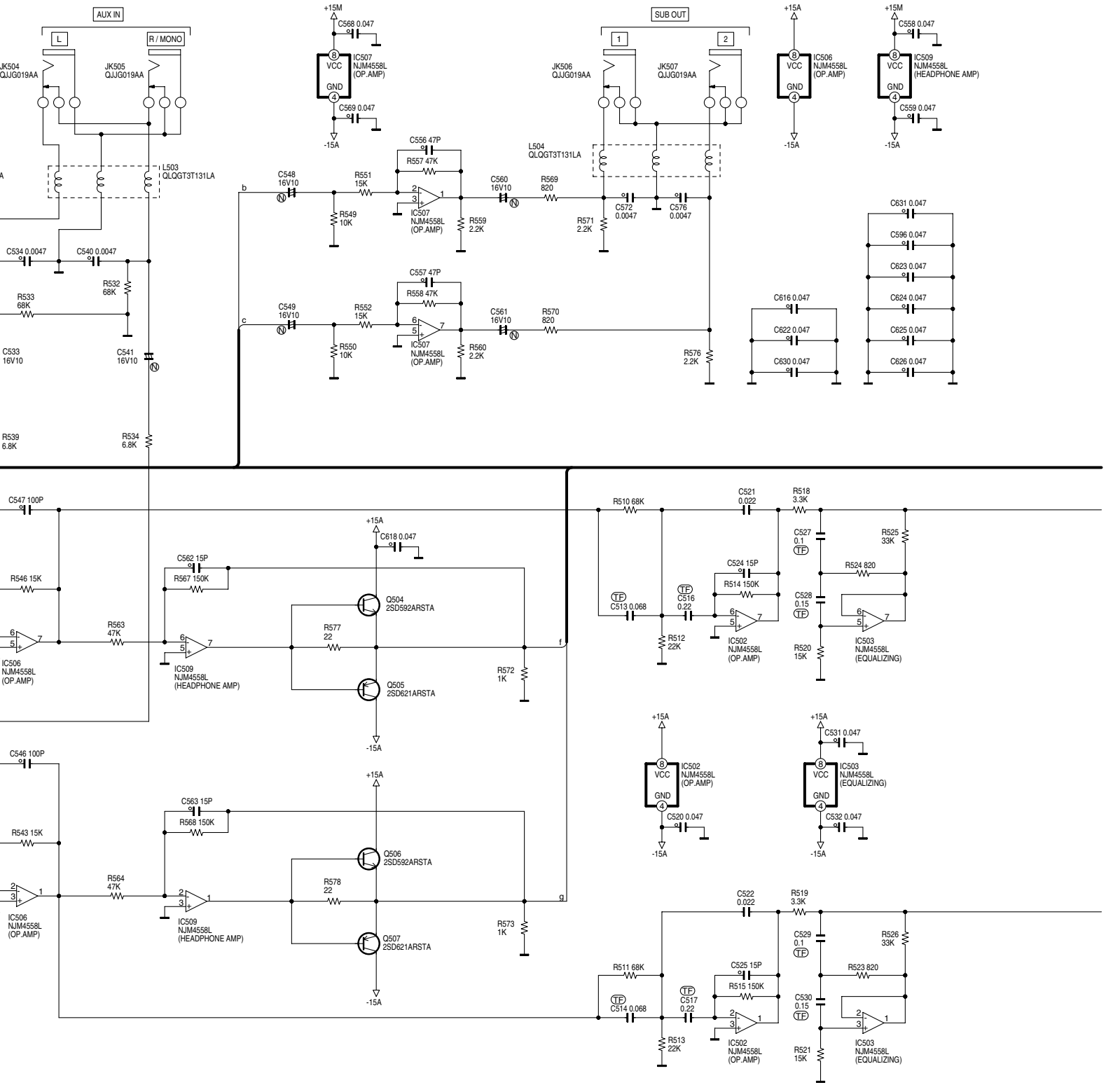
AUX IN
L
R / MONO
JK504 QJJG019AA
JK505 QJJG019AA
L503 QLQGT3T131LA
C534 0.0047
C540 0.0047
R532 68K
R533 68K
C533 16V10
C541 16V10
R539 6.8K
R534 6.8K
+15M
C568 0.047
IC507 NJM4558L (OP.AMP)
C569 0.047
-15A
C556 47P
R557 47K
C548 16V10
R551 15K
R549 10K
R559 2.2K
C560 16V10
R569 820
C557 47P
R558 47K
C549 16V10
R552 15K
R550 10K
R560 2.2K
C561 16V10
R570 820
SUB OUT
1
2
JK506 QJJG019AA
JK507 QJJG019AA
L504 QLQGT3T131LA
C572 0.0047
C576 0.0047
R571 2.2K
R576 2.2K
+15A
IC506 NJM4558L (OP.AMP)
-15A
+15M
C558 0.047
IC509 NJM4558L (HEADPHONE AMP)
C559 0.047
-15A
C631 0.047
C596 0.047
C623 0.047
C624 0.047
C625 0.047
C626 0.047
C616 0.047
C622 0.047
C630 0.047
C547 100P
R546 15K
R563 47K
IC506 NJM4558L (OP.AMP)
C562 15P
R567 150K
IC509 NJM4558L (HEADPHONE AMP)
+15A
C618 0.047
Q504 2SD592ARSTA
R577 22
Q505 2SD621ARSTA
-15A
R572 1K
f
C546 100P
R543 15K
R564 47K
IC506 NJM4558L (OP.AMP)
C563 15P
R568 150K
IC509 NJM4558L (HEADPHONE AMP)
+15A
Q506 2SD592ARSTA
R578 22
Q507 2SD621ARSTA
-15A
R573 1K
g
R510 68K
C521 0.022
R518 3.3K
C513 0.068
C516 0.22
C524 15P
R514 150K
R512 22K
IC502 NJM4558L (OP.AMP)
C527 0.1
R525 33K
R524 820
C528 0.15
R520 15K
IC503 NJM4558L (EQUALIZING)
+15A
IC502 NJM4558L (OP.AMP)
C520 0.047
-15A
+15A
C531 0.047
IC503 NJM4558L (EQUALIZING)
C532 0.047
-15A
C522 0.022
R519 3.3K
R511 68K
C514 0.068
C517 0.22
C525 15P
R515 150K
R513 22K
IC502 NJM4558L (OP.AMP)
C529 0.1
R526 33K
R523 820
C530 0.15
R521 15K
IC503 NJM4558L (EQUALIZING)

SCHEMATIC DIAGRAM-12

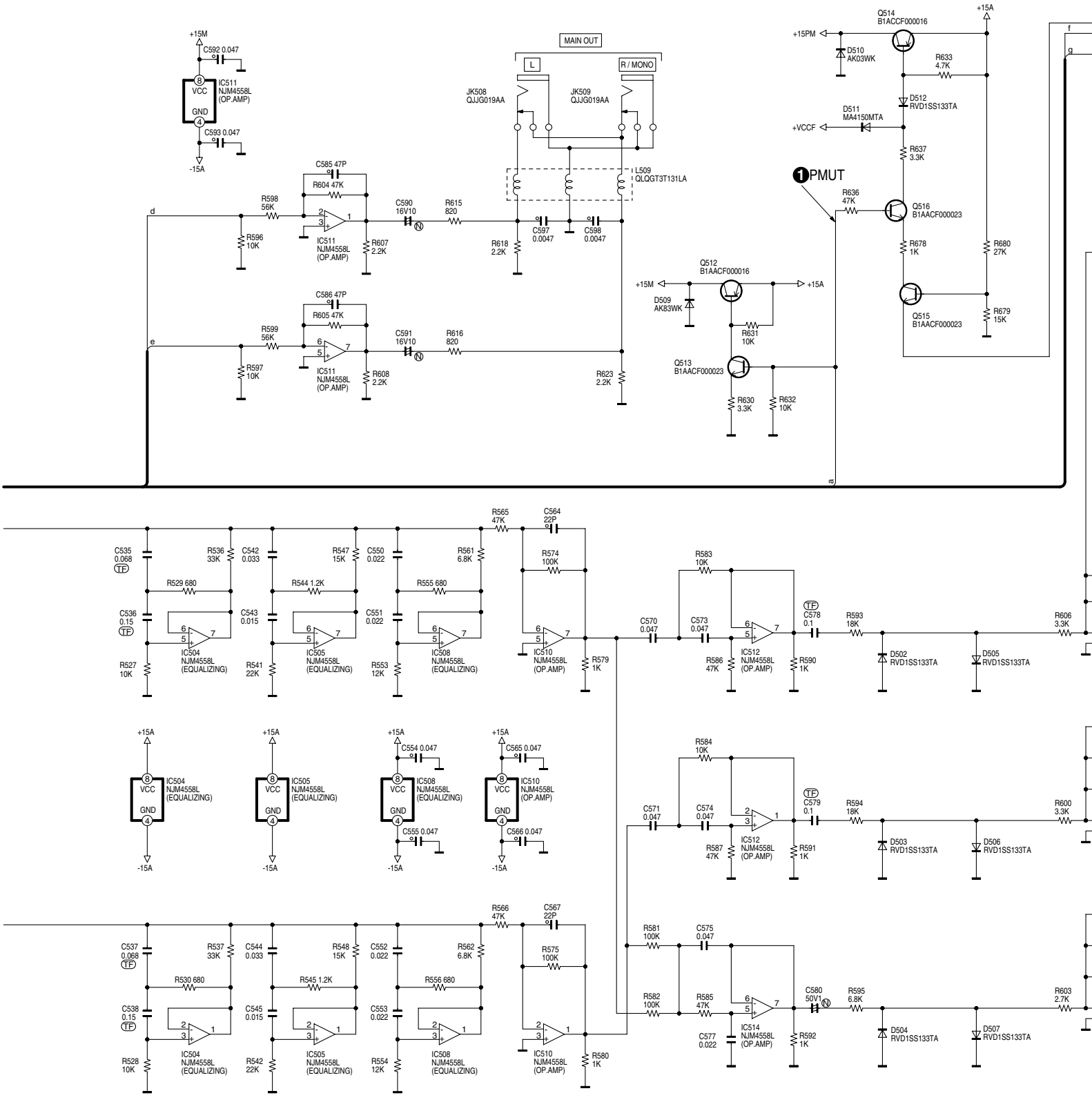

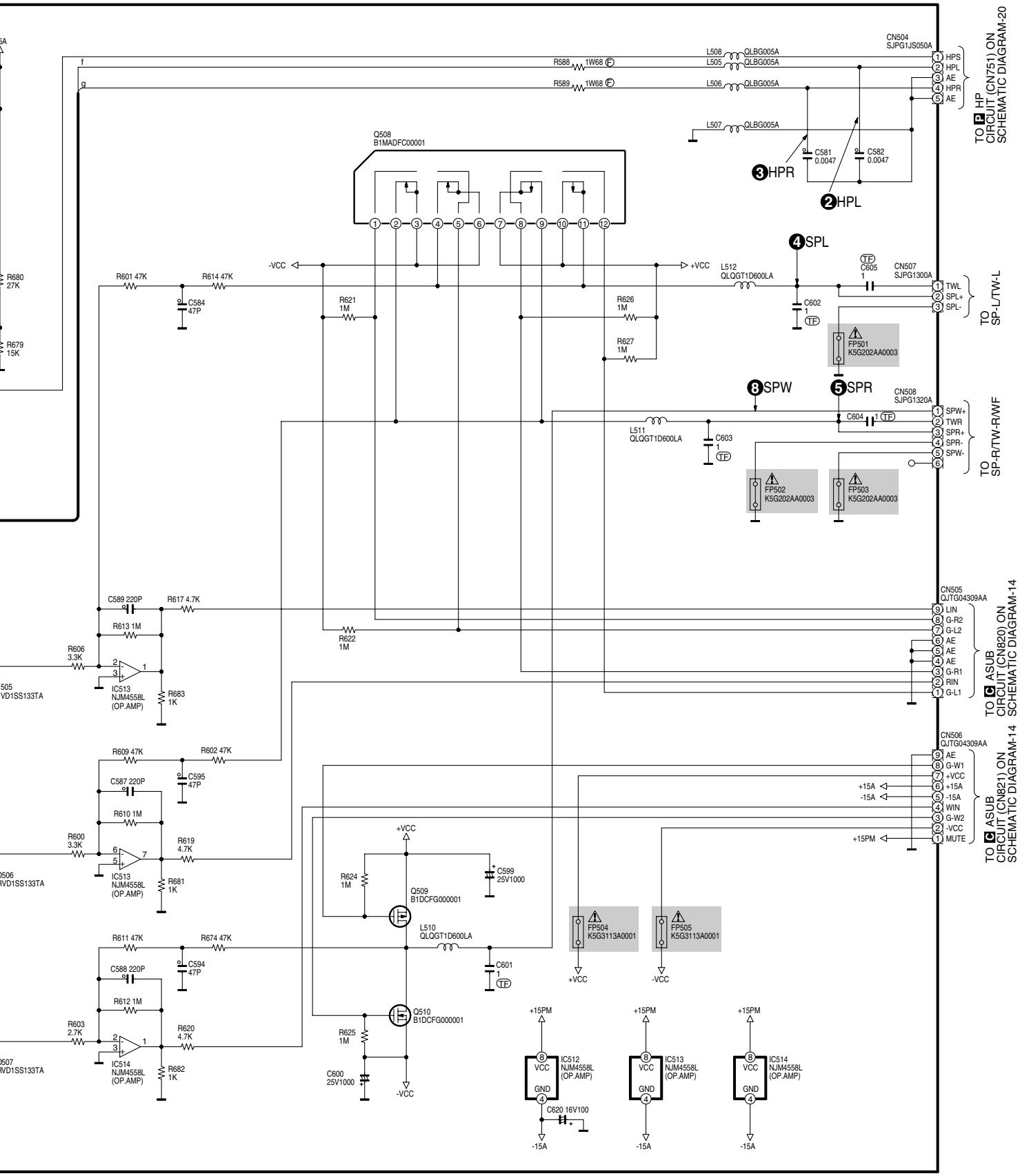

SX-KN7000 FAJ 1/2 SCHEMATIC DIAGRAM (2/2)

SCHEMATIC DIAGRAM-13

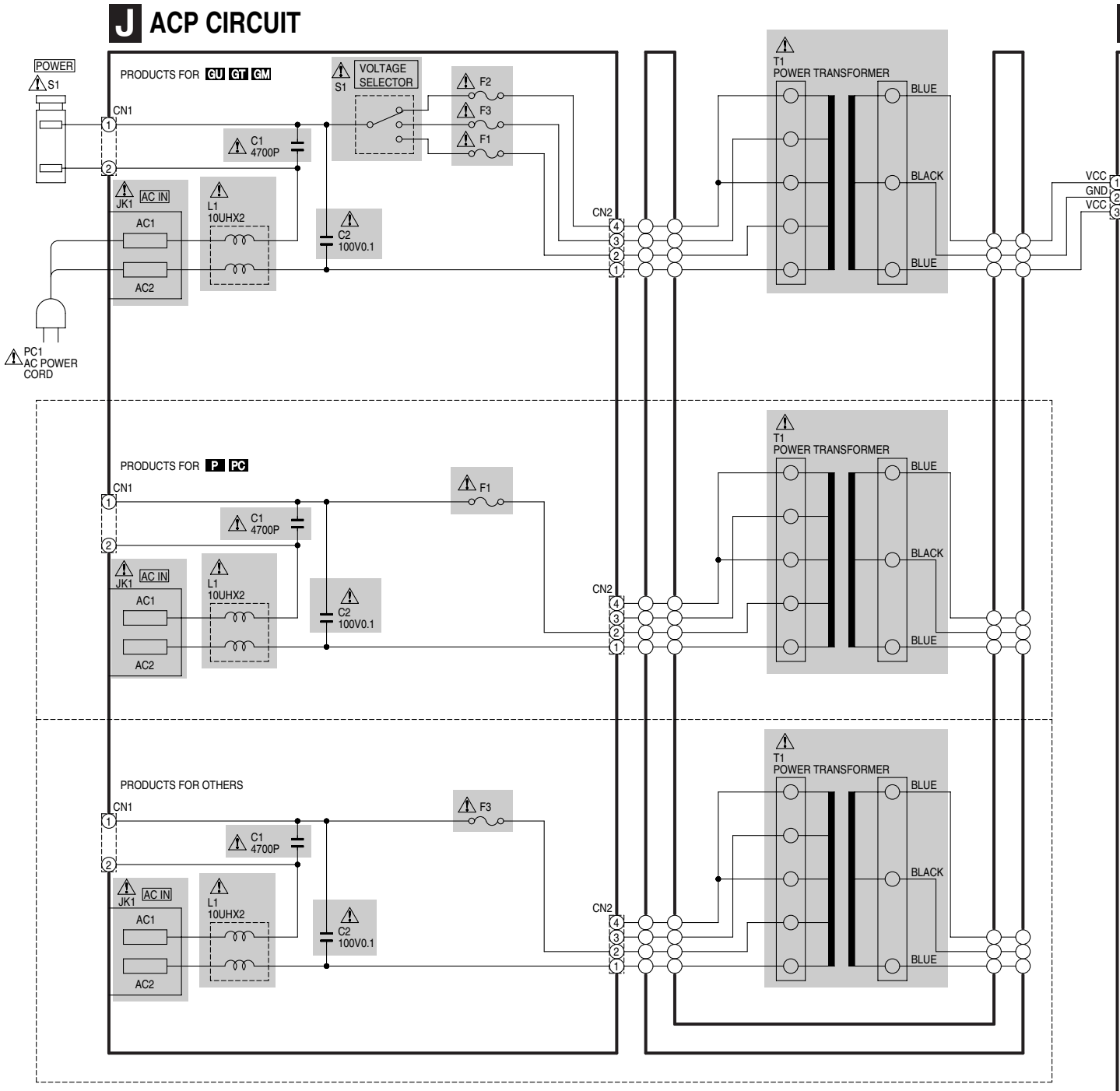

B FAJ 2/2 CIRCUIT

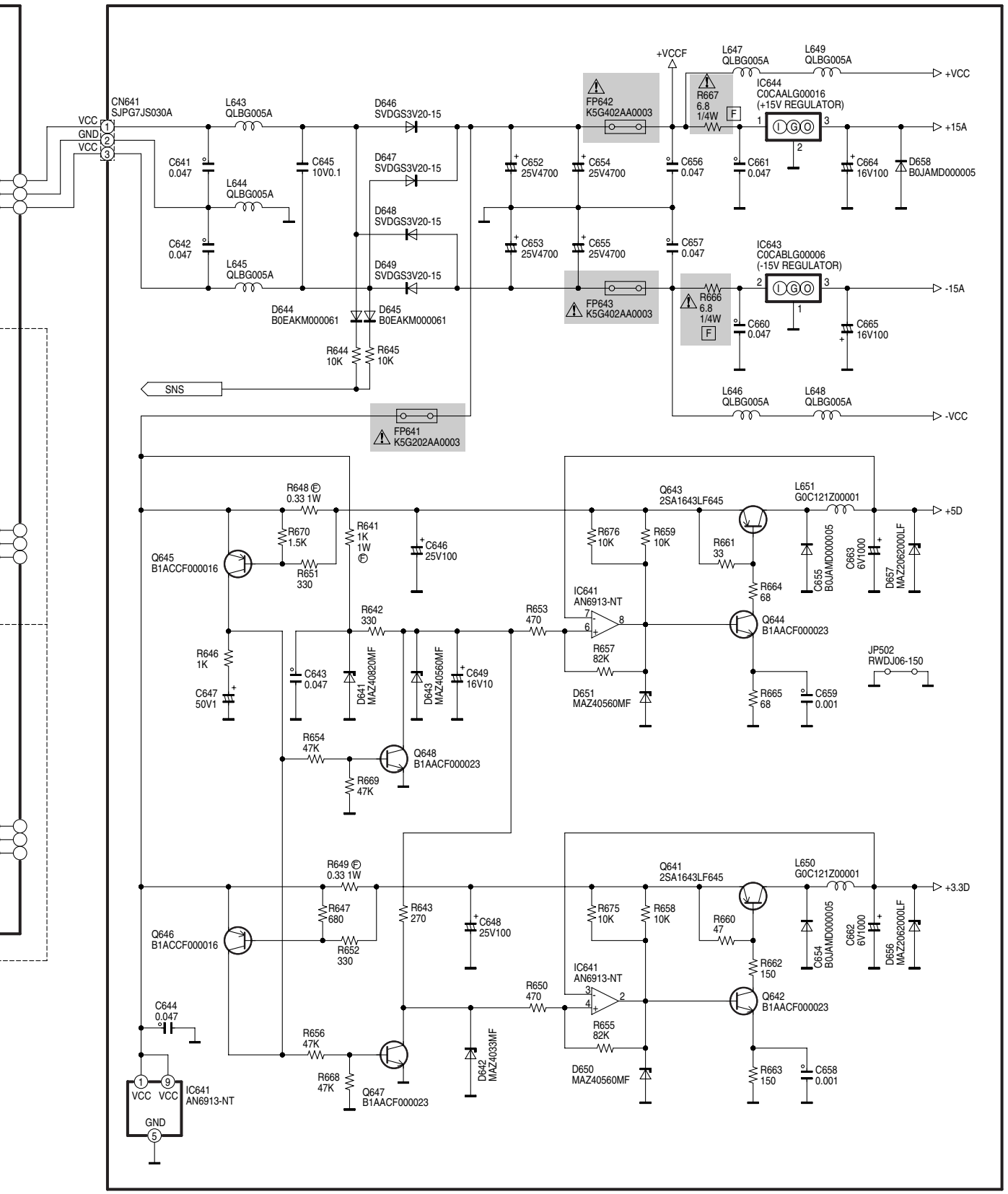

SX-KN7000 ACP / FAJ 2/2 SCHEMATIC DIAGRAM

SCHEMATIC DIAGRAM-14

C ASUB CIRCUIT

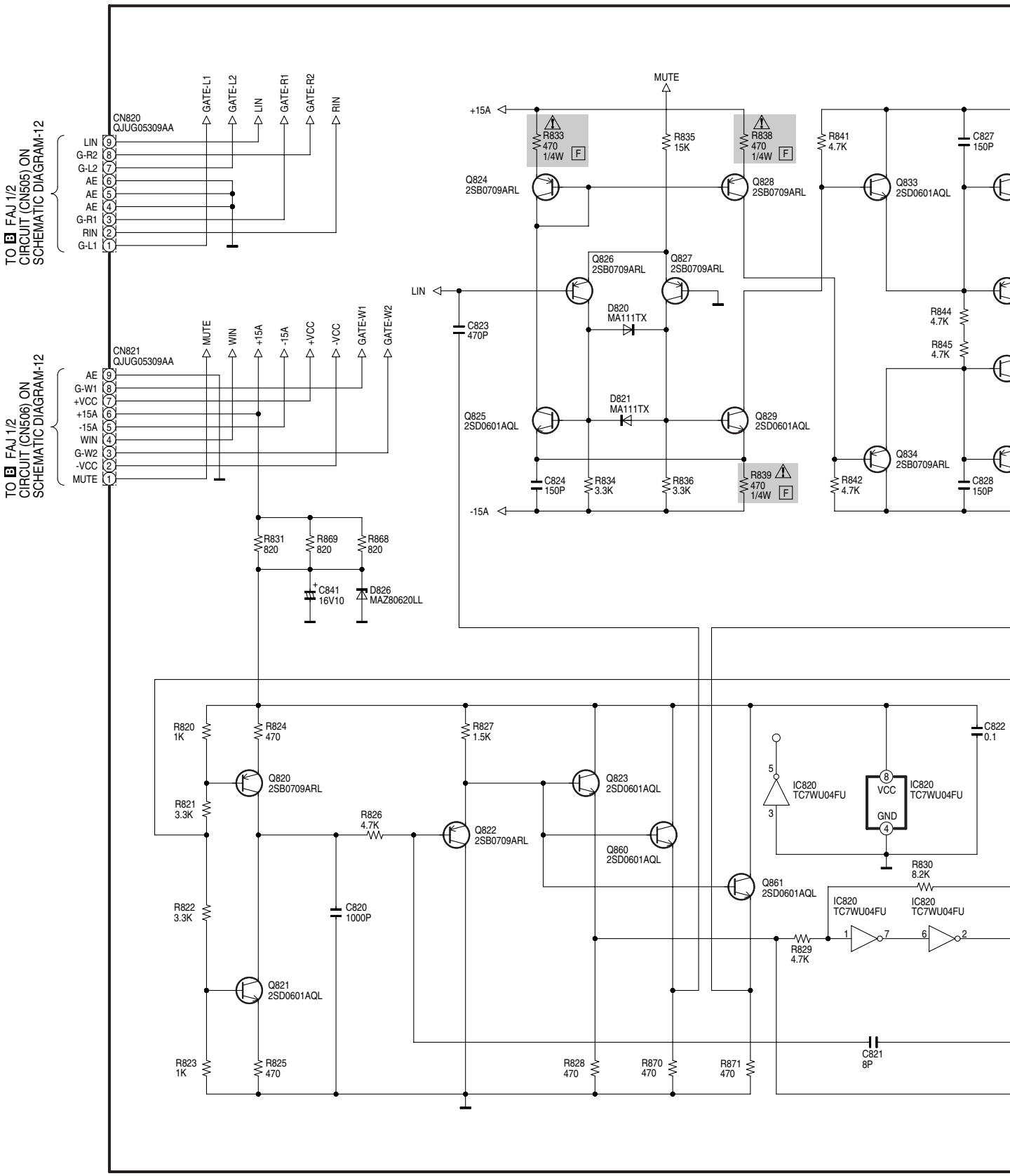

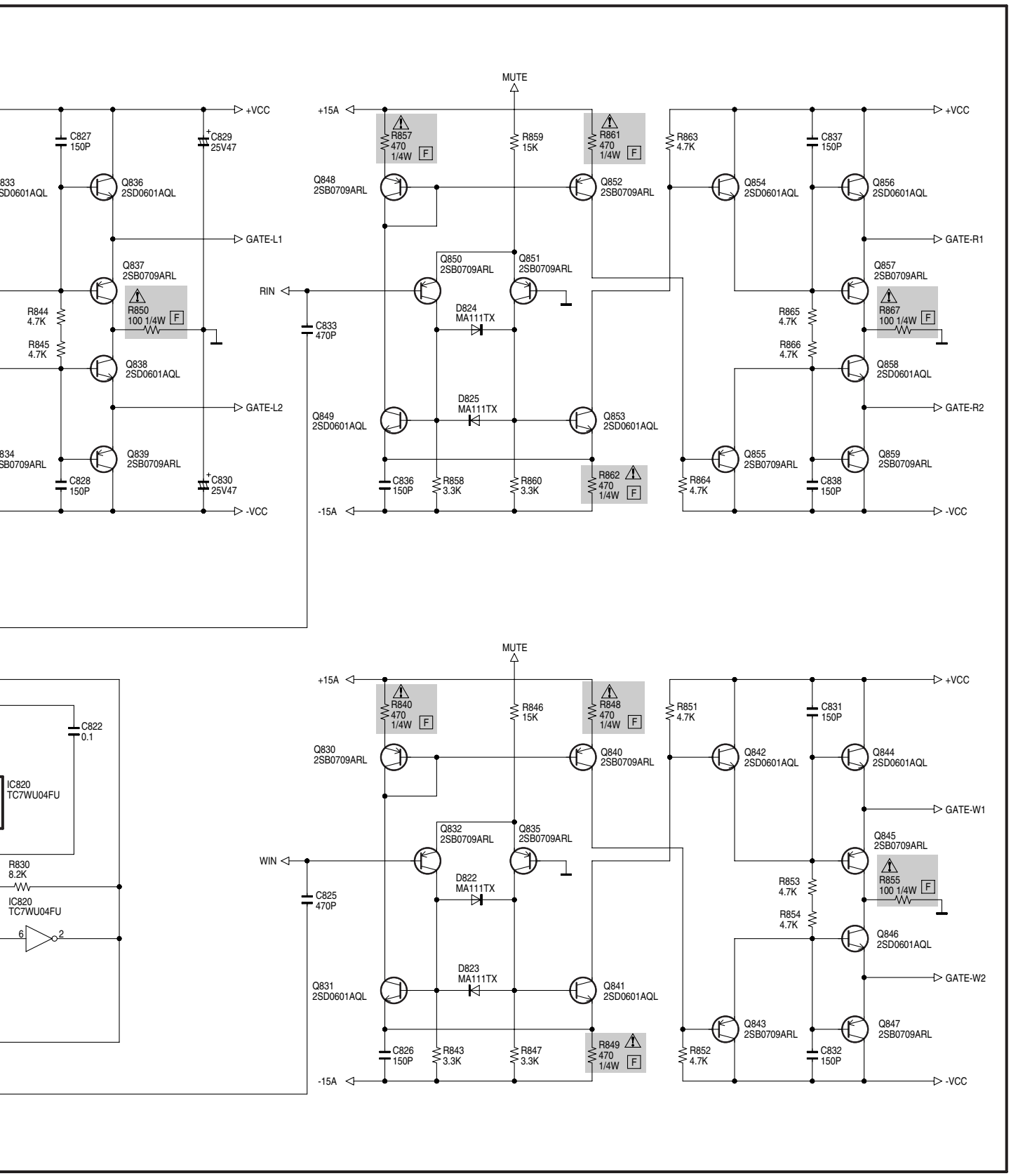

SX-KN7000 ASUB SCHEMATIC DIAGRAM

SCHEMATIC DIAGRAM-15

E CPL CIRCUIT

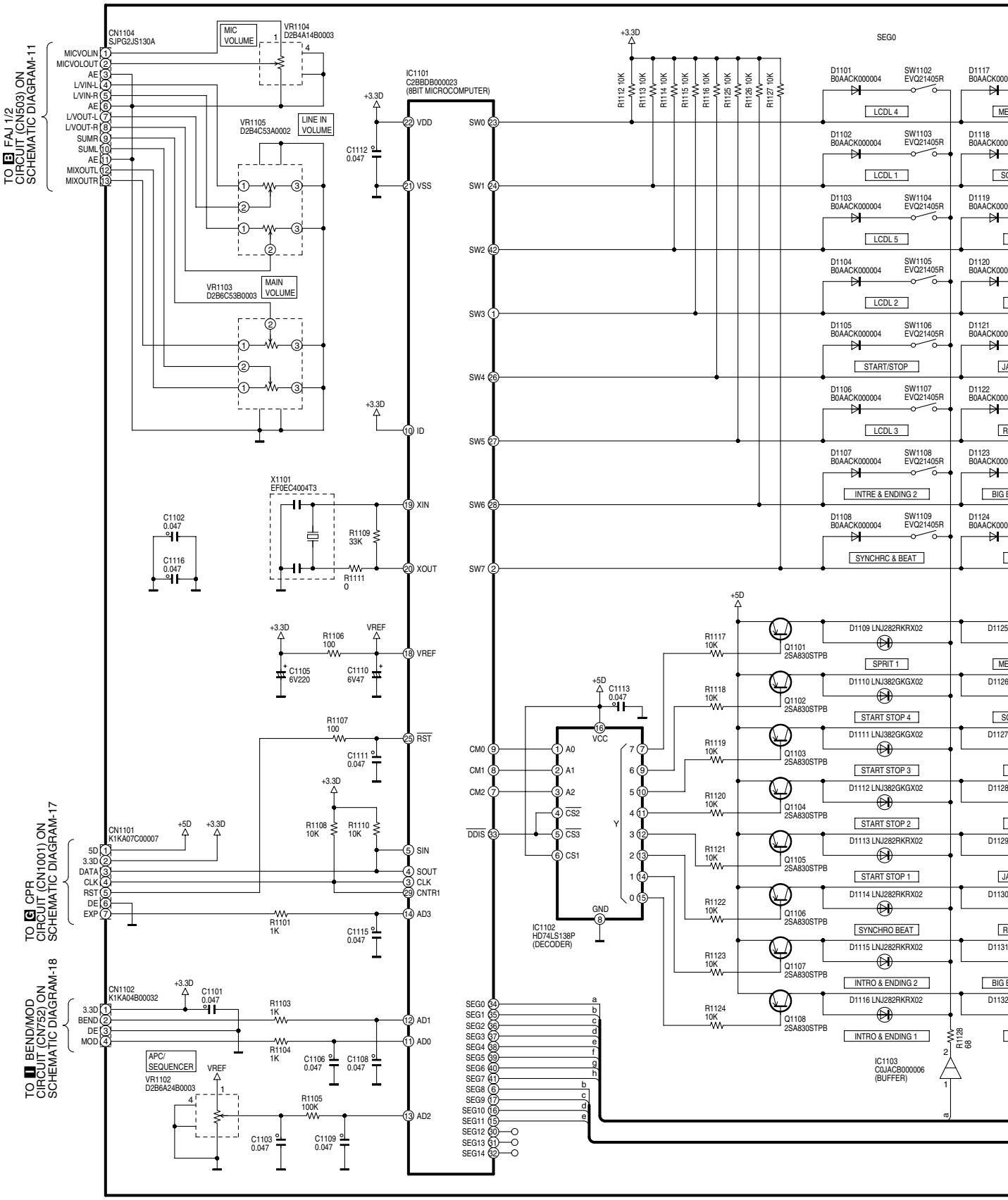

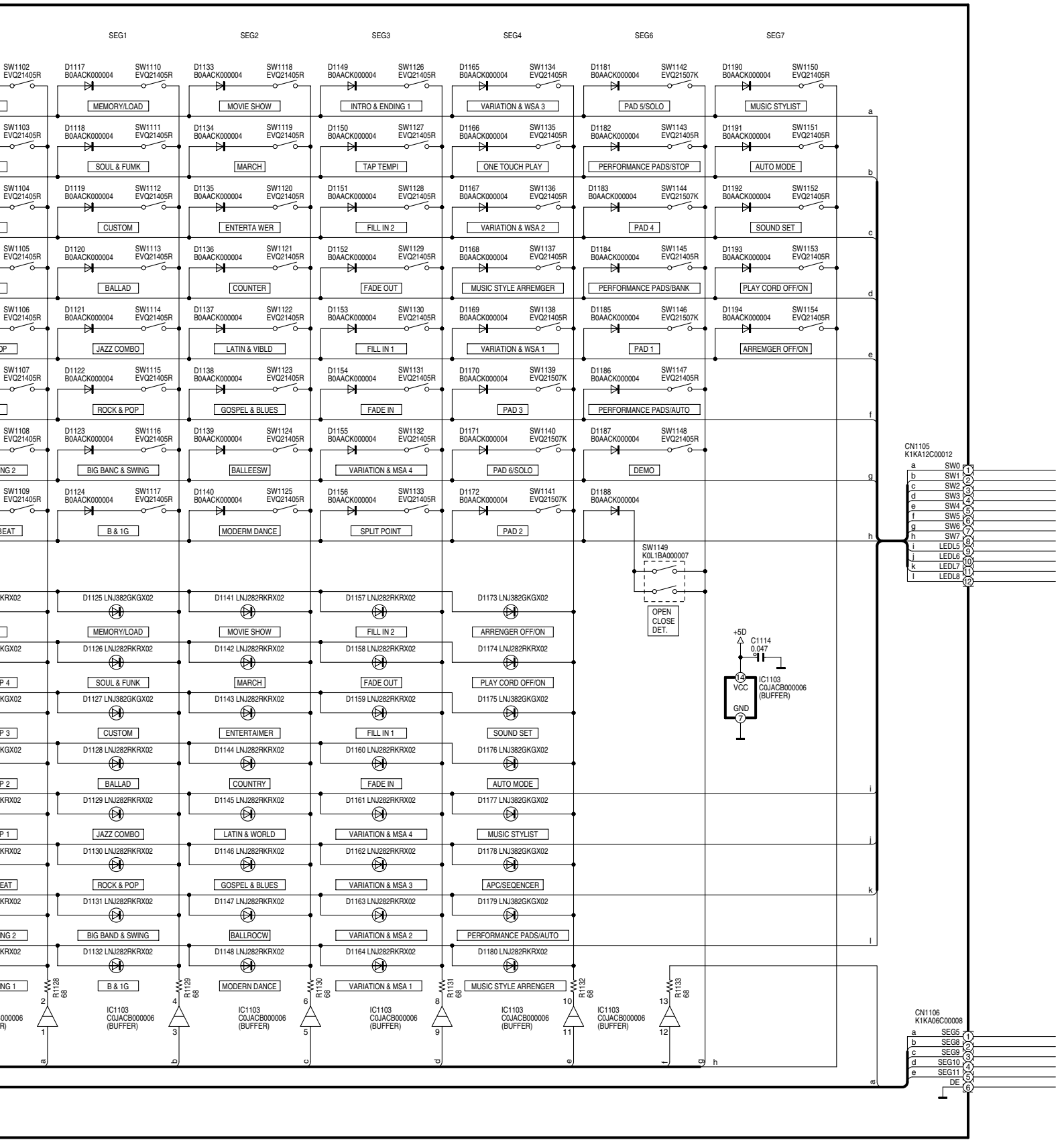

SX-KN7000 CPL SCHEMATIC DIAGRAM

SCHEMATIC DIAGRAM-16

F CPC CIRCUIT

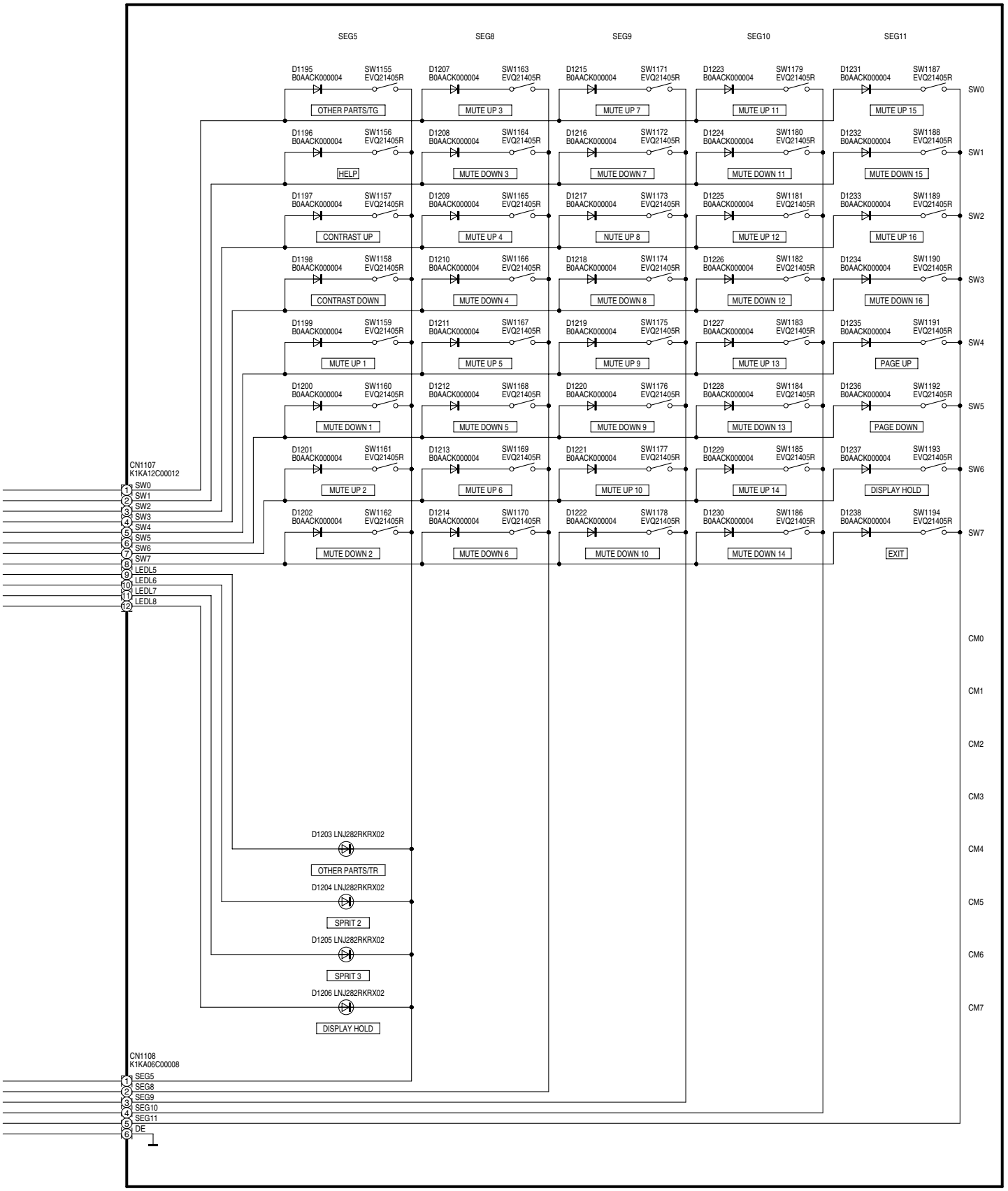

SX-KN7000 CPC SCHEMATIC DIAGRAM

SCHEMATIC DIAGRAM-17

G CPR CIRCUIT

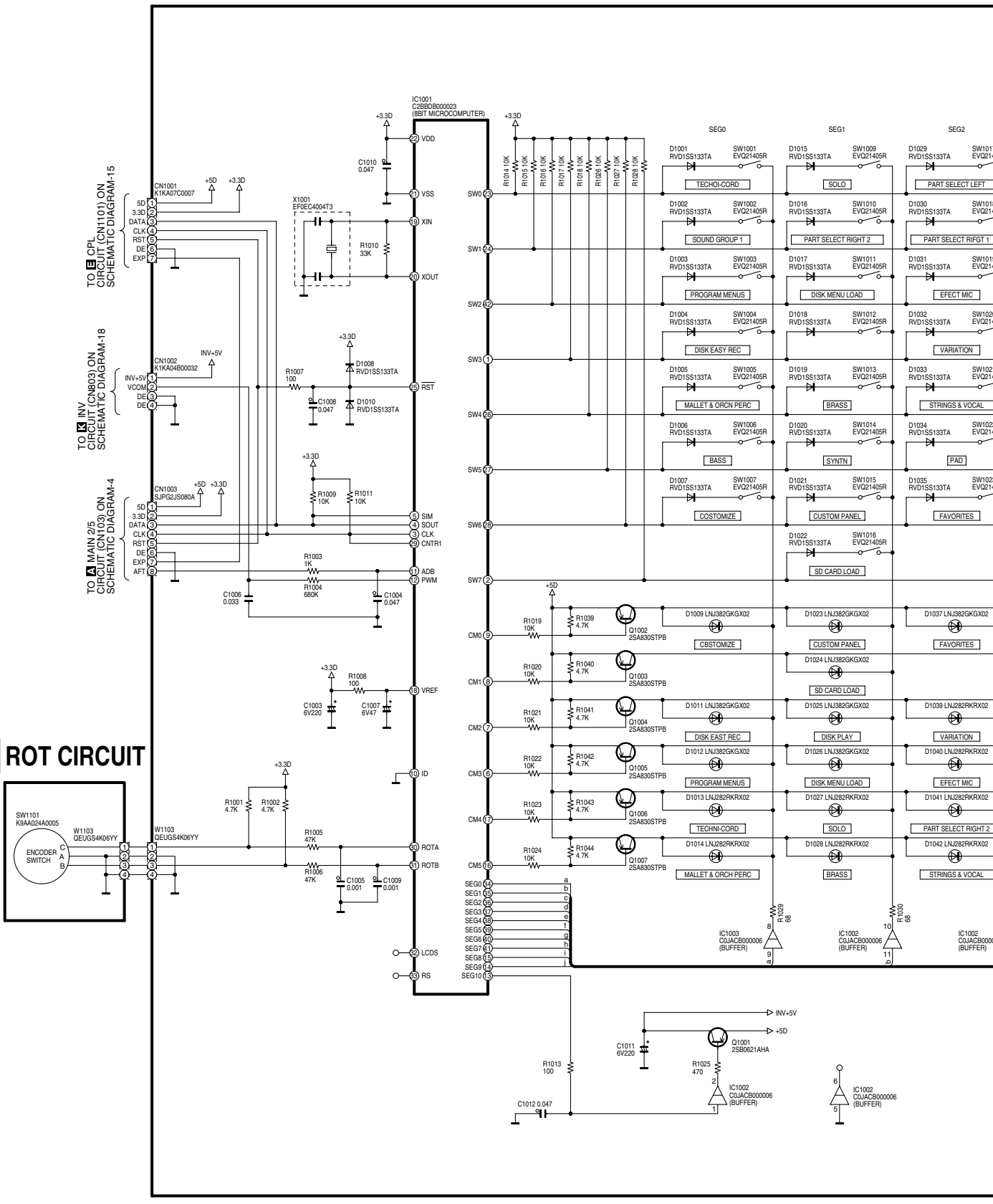

H ROT CIRCUIT

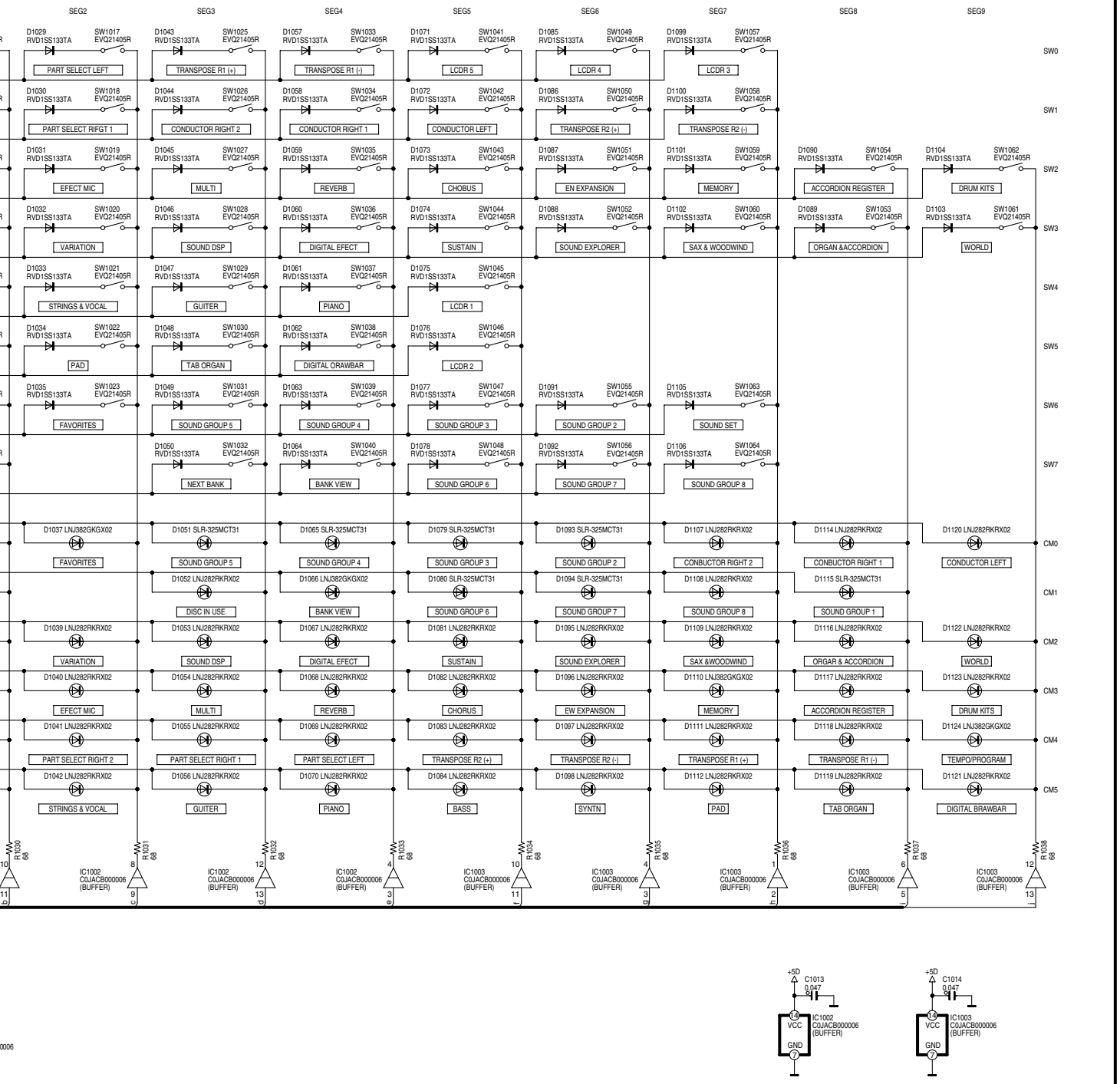
SEG2
SEG3
SEG4
SEG5
SEG6
SEG7
SEG8
SEG9
SW0
SW1
SW2
SW3
SW4
SW5
SW6
SW7
CM0
CM1
CM2
CM3
CM4
CM5
PART SELECT LEFT
TRANSPOSE R1 (+)
TRANSPOSE R1 (-)
LCDR 5
LCDR 4
LCDR 3
PART SELECT RIFGT 1
CONDUCTOR RIGHT 2
CONDUCTOR RIGHT 1
CONDUCTOR LEFT
TRANSPOSE R2 (+)
TRANSPOSE R2 (-)
EFECT MIC
MULTI
REVERB
CHOBUS
EN EXPANSION
MEMORY
ACCORDION REGISTER
DRUM KITS
VARIATION
SOUND DSP
DIGITAL EFECT
SUSTAIN
SOUND EXPLORER
SAX & WOODWIND
ORGAN &ACCORDION
WORLD
STRINGS & VOCAL
GUITER
PIANO
LCDR 1
PAD
TAB ORGAN
DIGITAL ORAWBAR
LCDR 2
FAVORITES
SOUND GROUP 5
SOUND GROUP 4
SOUND GROUP 3
SOUND GROUP 2
SOUND SET
NEXT BANK
BANK VIEW
SOUND GROUP 6
SOUND GROUP 7
SOUND GROUP 8
DISC IN USE
SOUND GROUP 1
CONBUCTOR RIGHT 2
CONBUCTOR RIGHT 1
CONDUCTOR LEFT
ORGAR & ACCORDION
TEMPO/PROGRAM
PART SELECT RIGHT 2
PART SELECT RIGHT 1
PART SELECT LEFT
TRANSPOSE R2 (+)
TRANSPOSE R2 (-)
TRANSPOSE R1 (+)
TRANSPOSE R1 (-)
SYNTN
BASS
IC1002 C0JACB000006 (BUFFER)
IC1003 C0JACB000006 (BUFFER)
+5D
C1013 0.047
C1014 0.047
VCC
GND

SCHEMATIC DIAGRAM-18

J JACK CIRCUIT

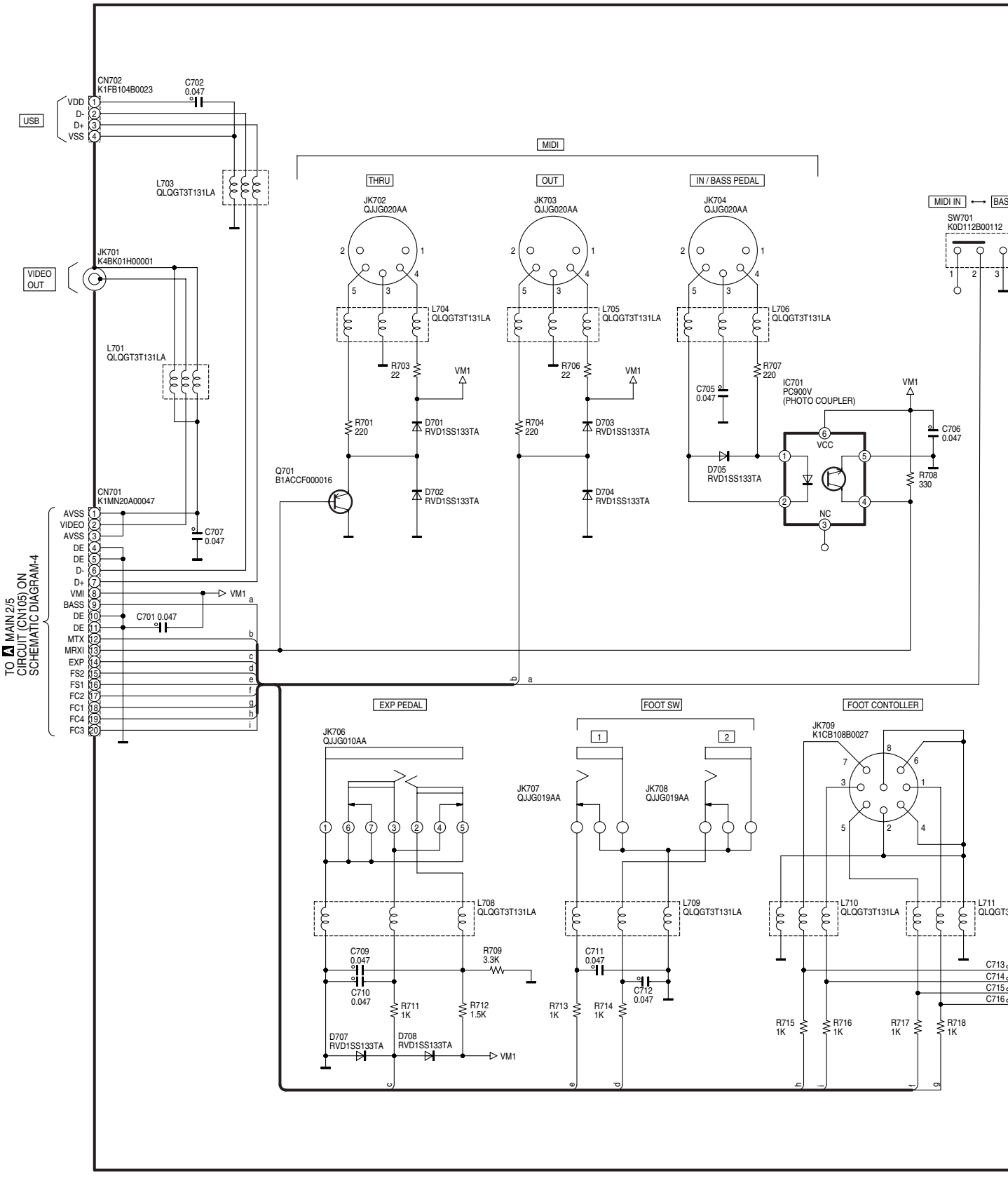

I BEND/MOD CIRCUIT

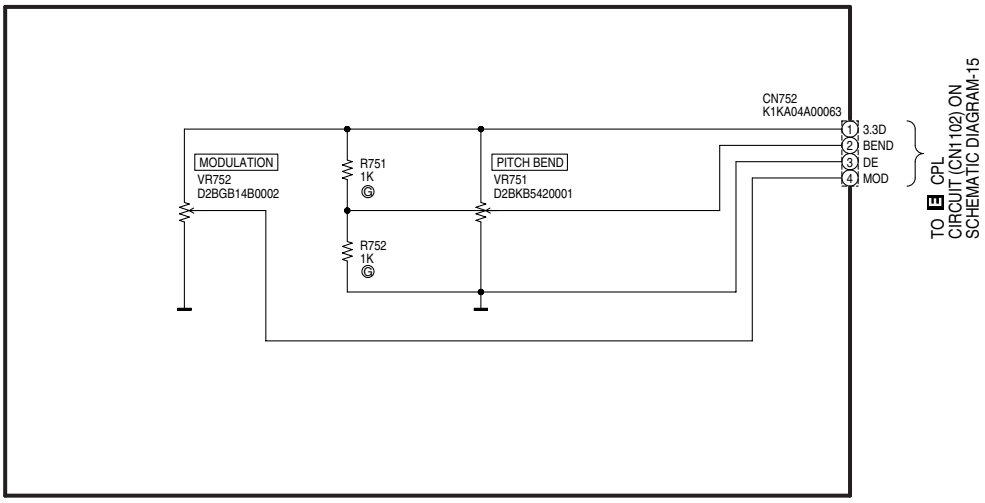

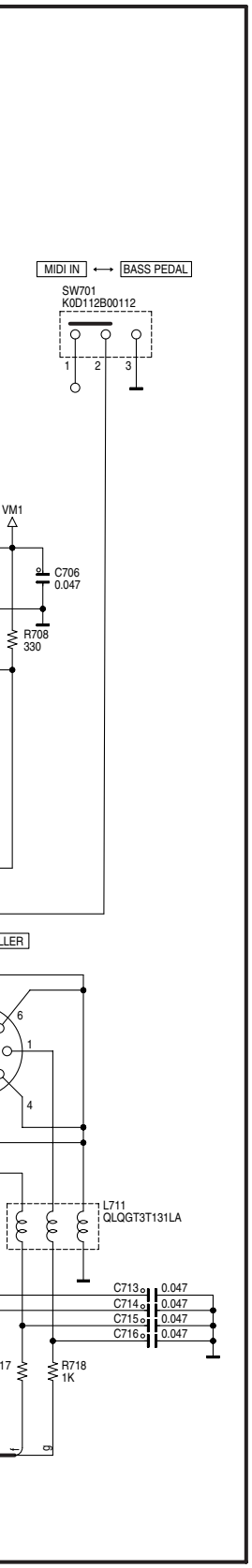

K INV CIRCUIT

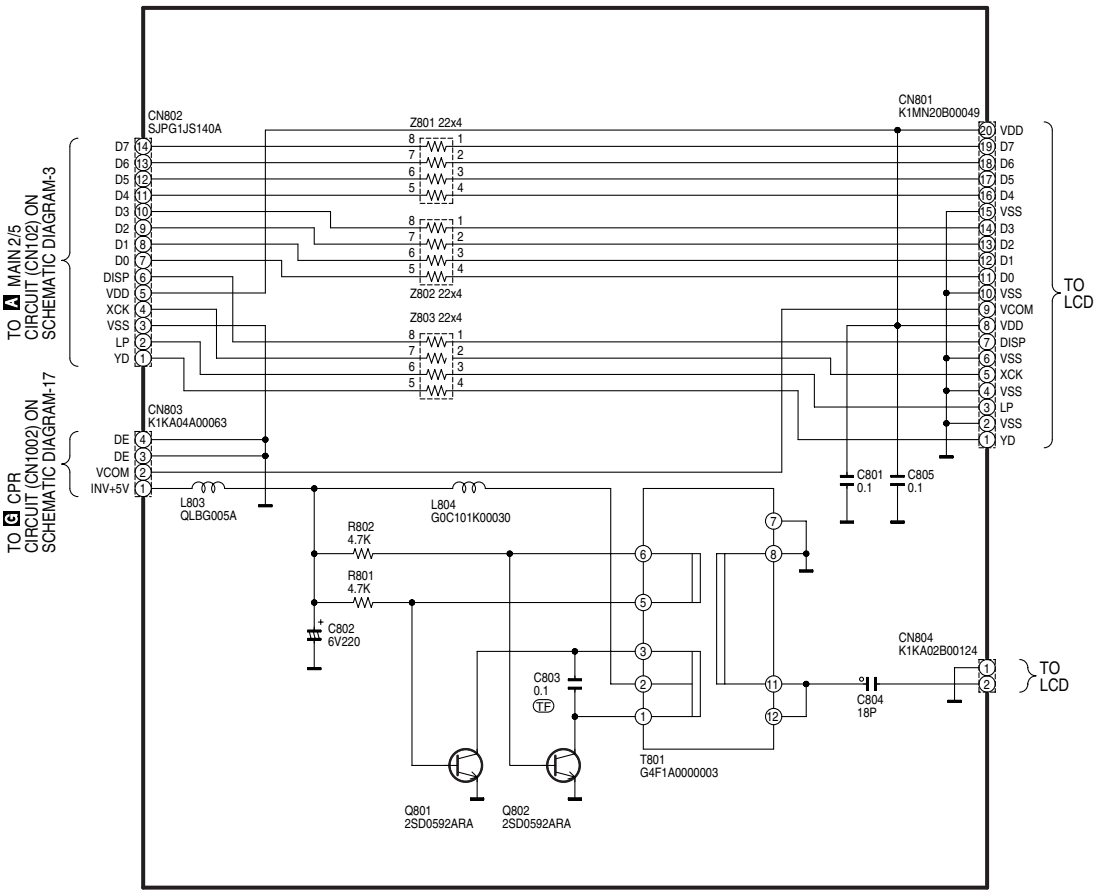

SX-KN7000 JACK / BEND/MOD / INV SCHEMATIC DIAGRAM

SCHEMATIC DIAGRAM-19

L MKB1 CIRCUIT

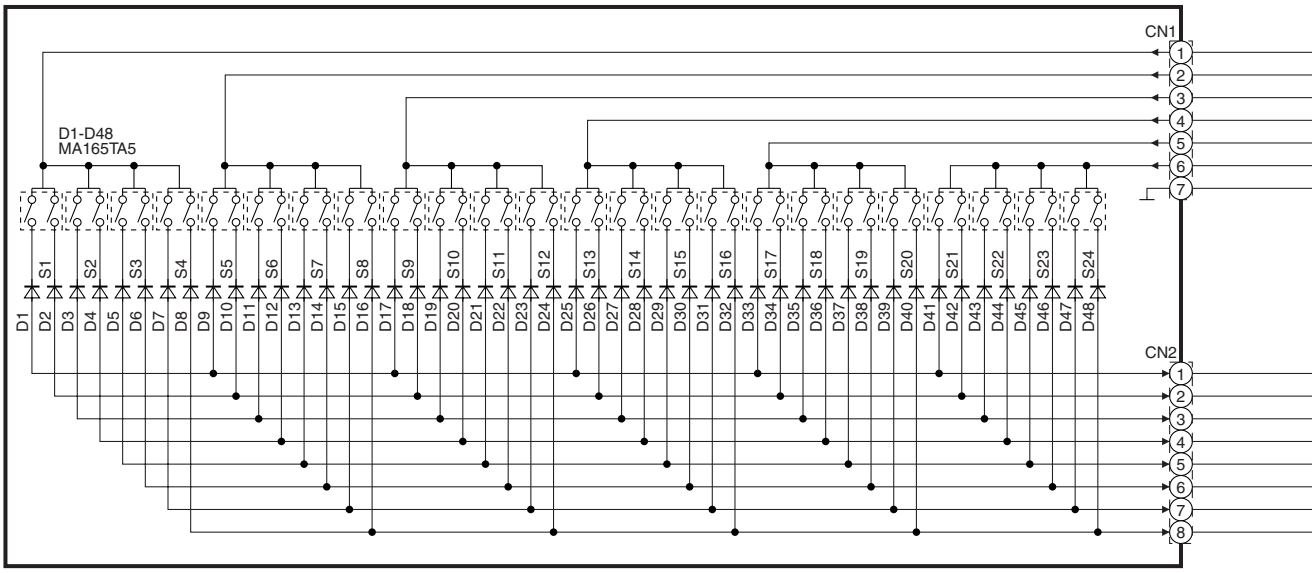

M MKB2 CIRCUIT

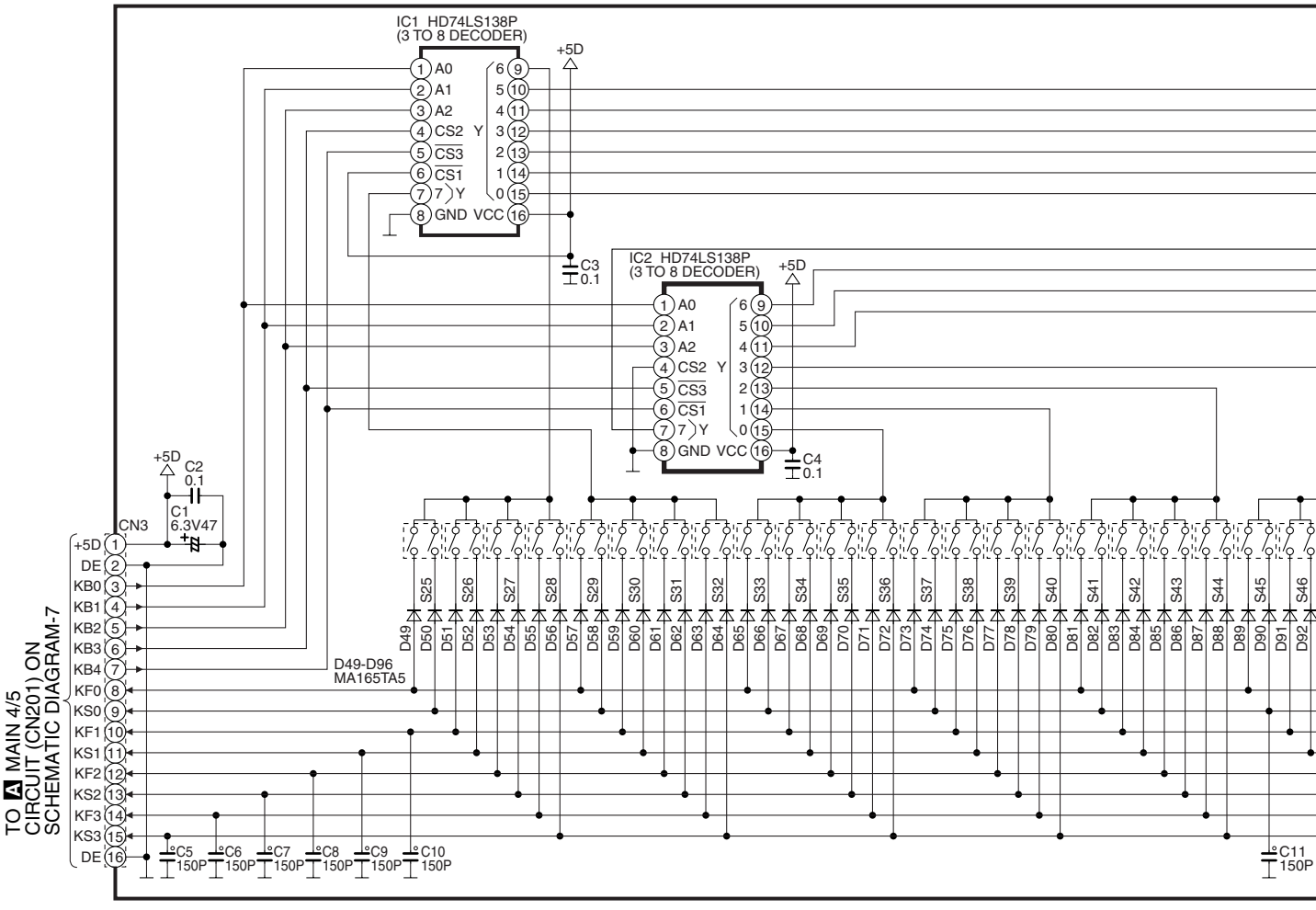

N MKB3 CIRCUIT

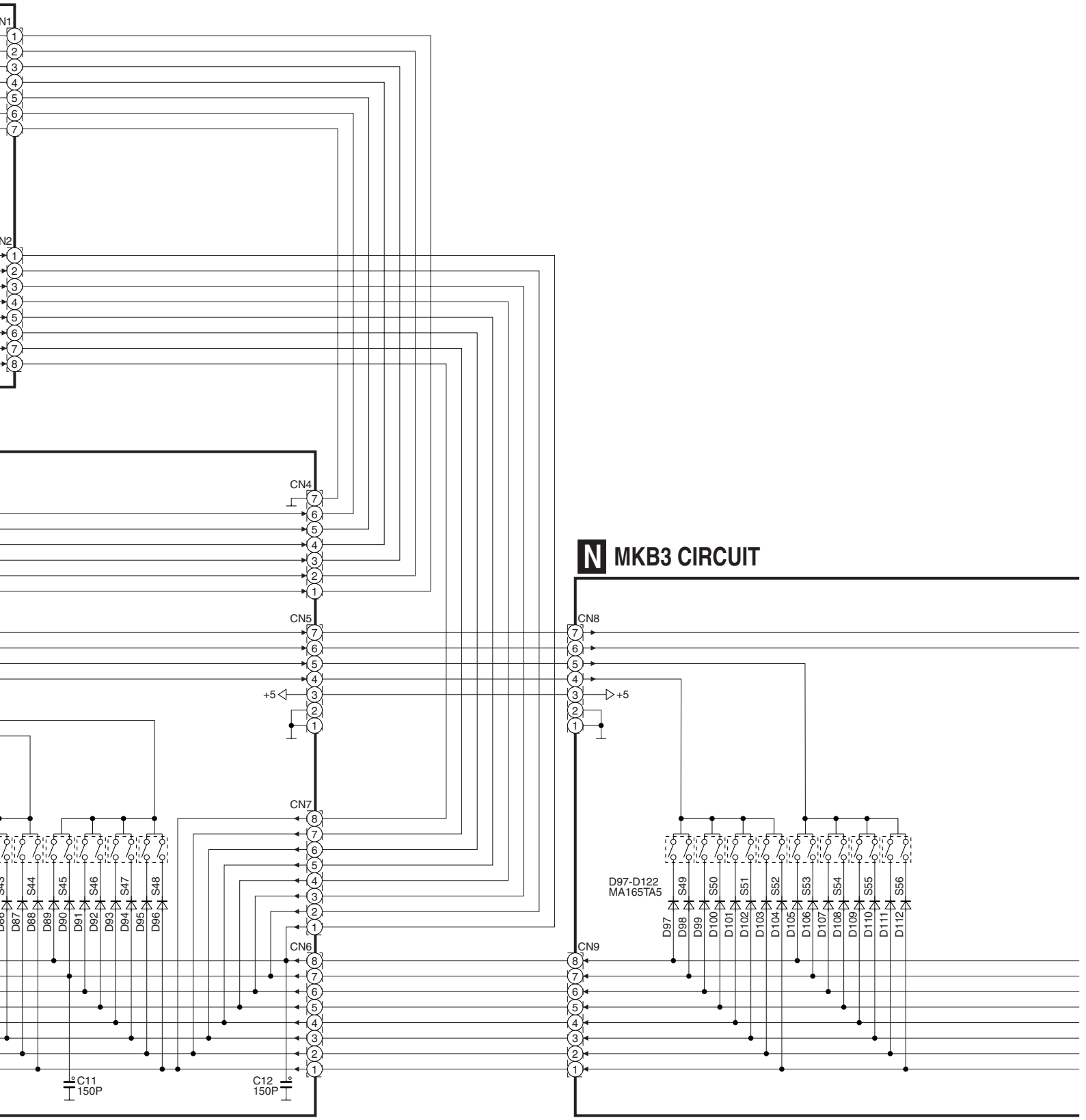

SX-KN7000 MKB1 / MKB2 / MKB3 (1/2) SCHEMATIC DIAGRAM

SCHEMATIC DIAGRAM-20

Q SD I/F CIRCUIT

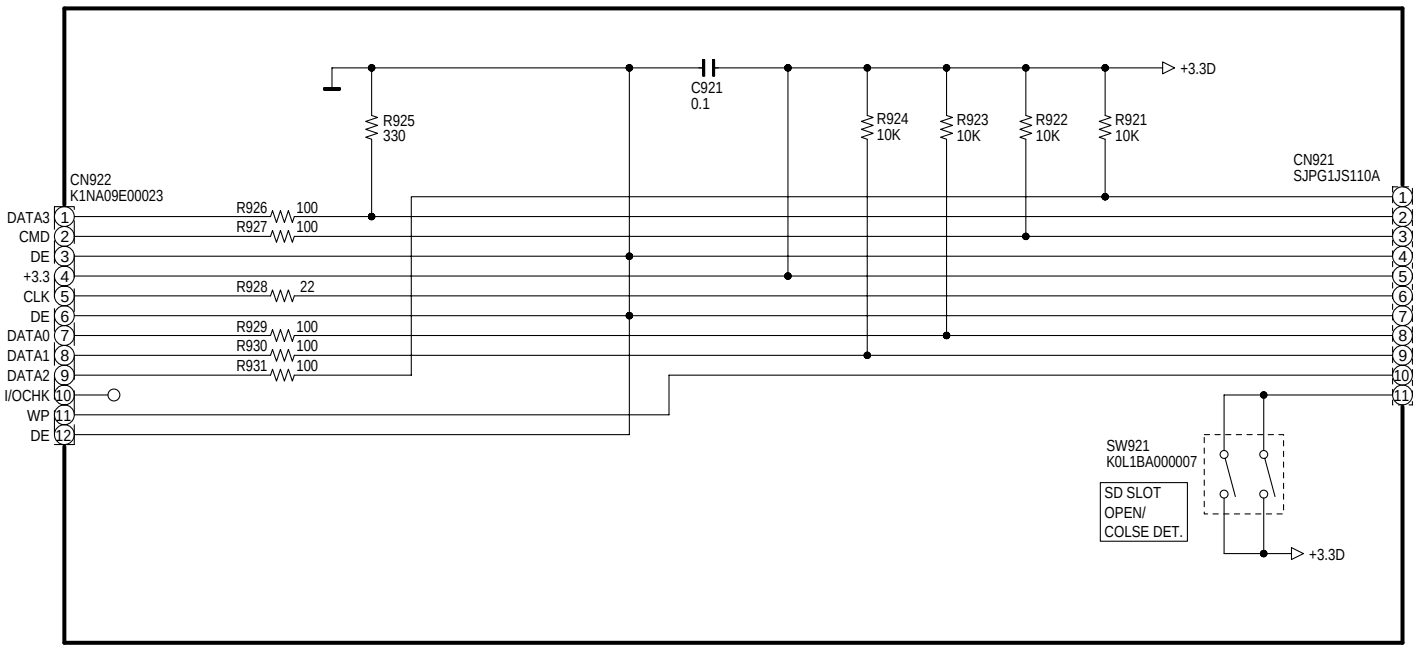

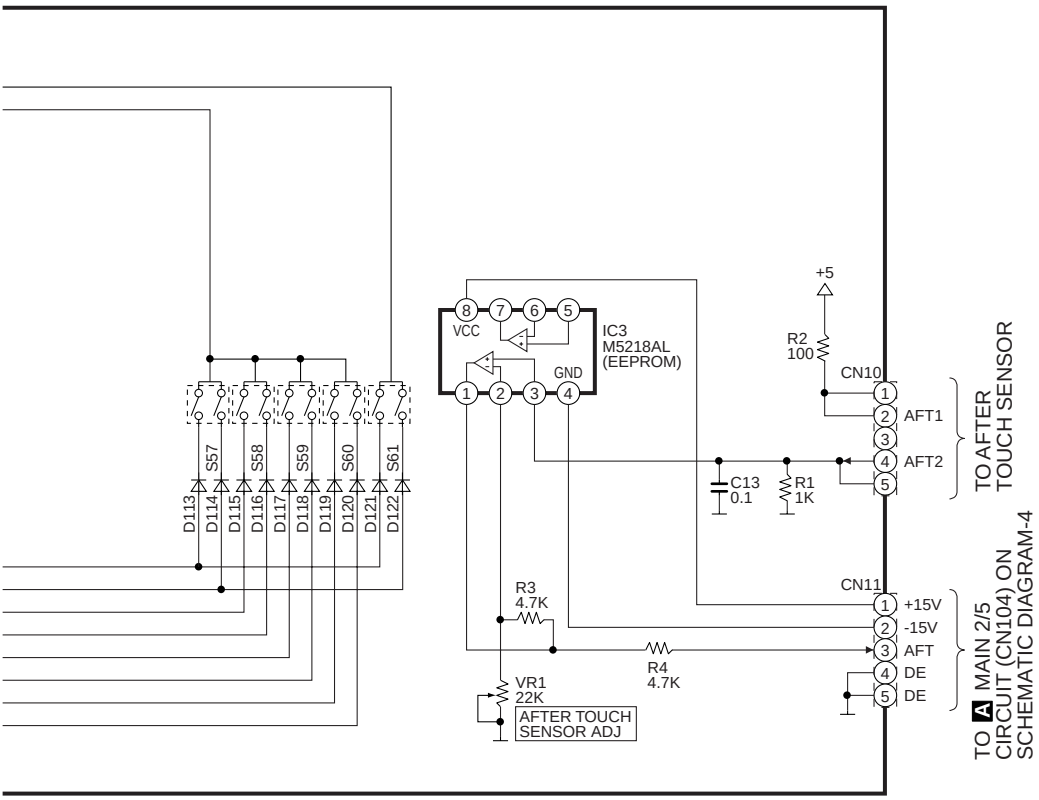

O SD PLAY SW/VOL CIRCUIT

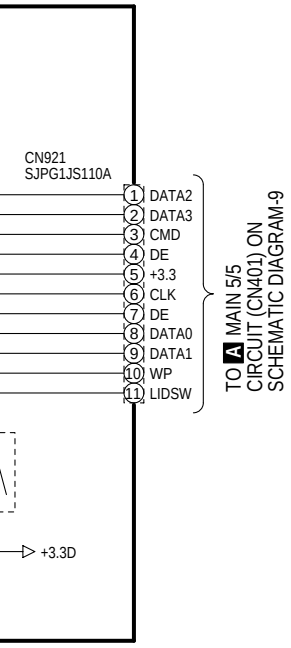

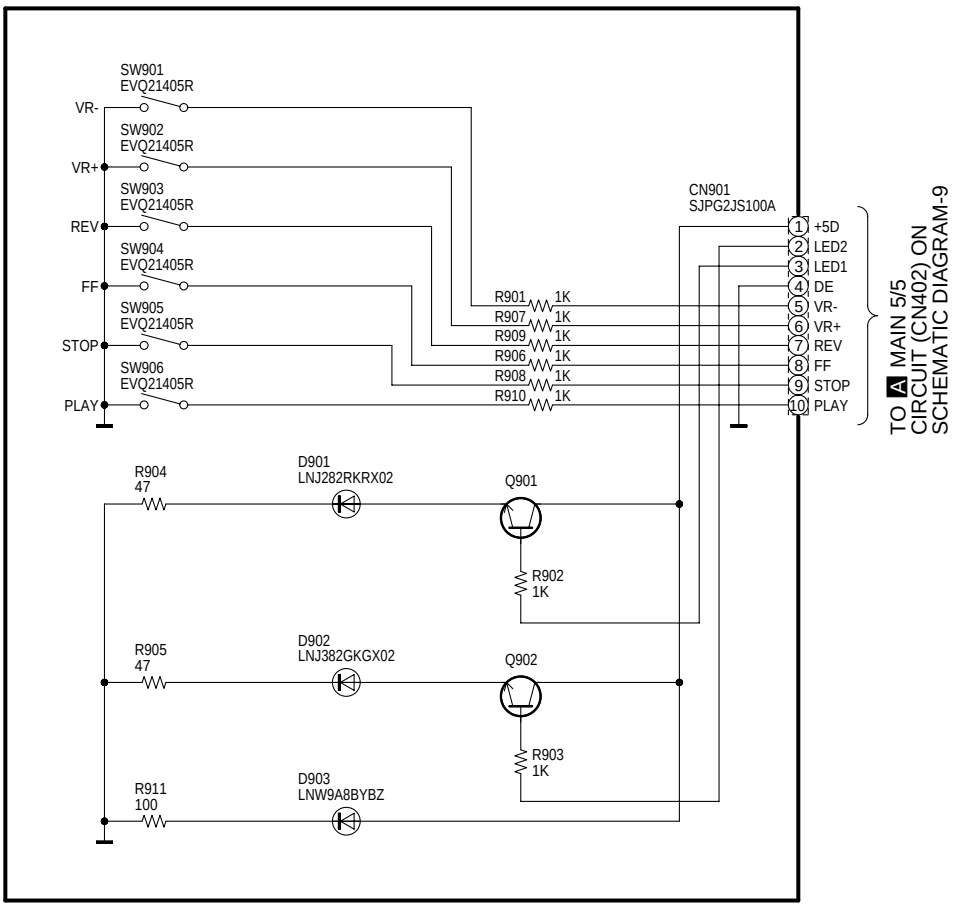

P HP CIRCUIT

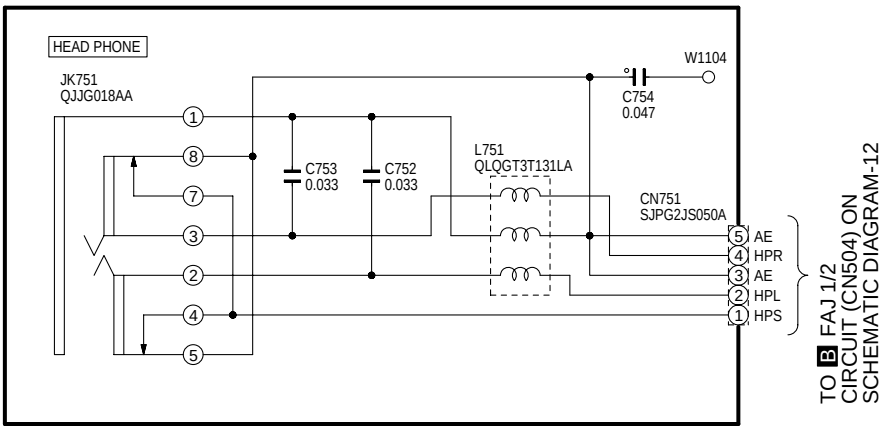

SCHEMATIC DIAGRAM-1

A MAIN 1/5 CIRCUIT

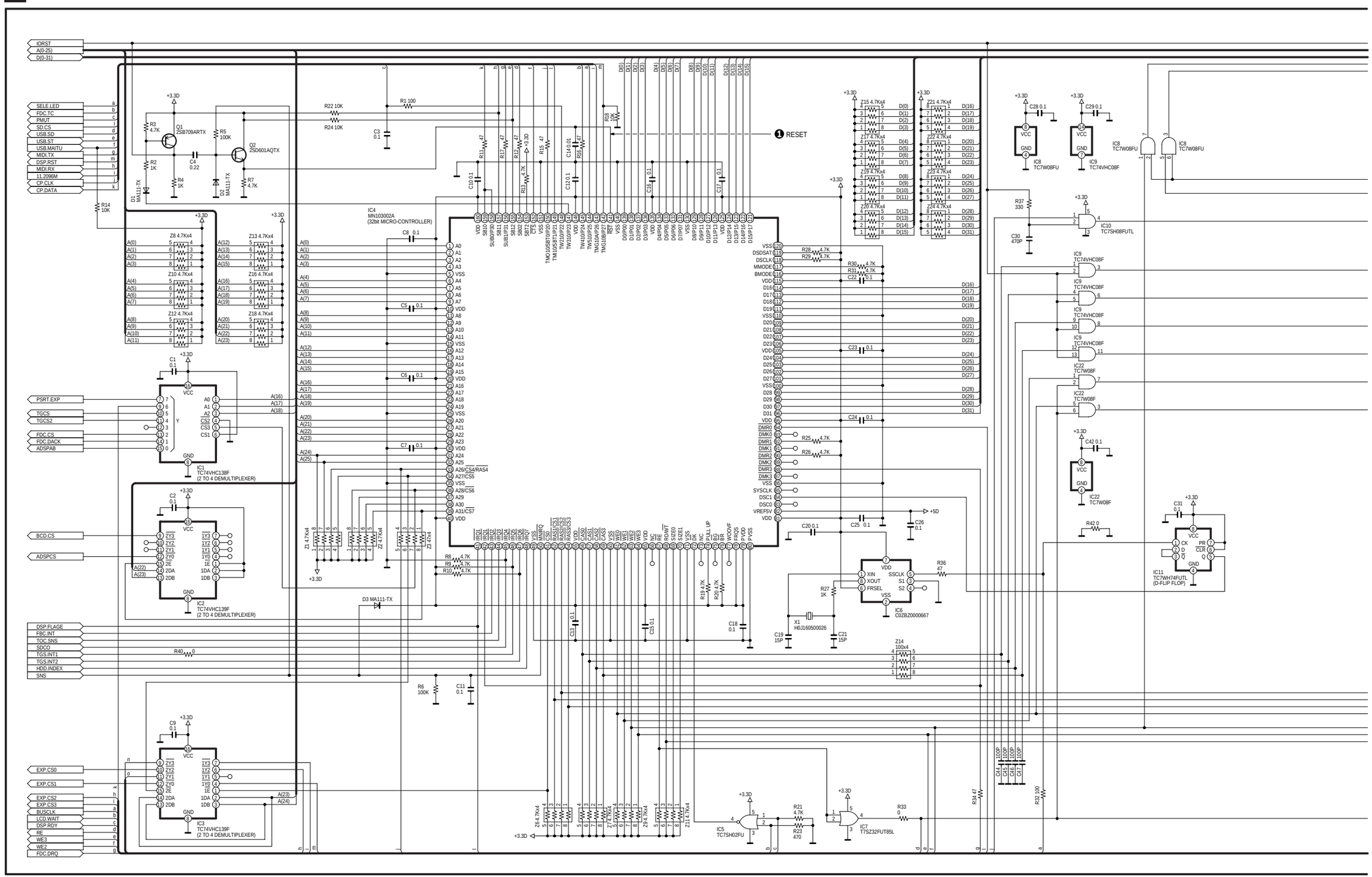

SX-KN7000 MAIN 1/5 SCHEMATIC DIAGRAM (1/2)

SCHEMATIC DIAGRAM-2

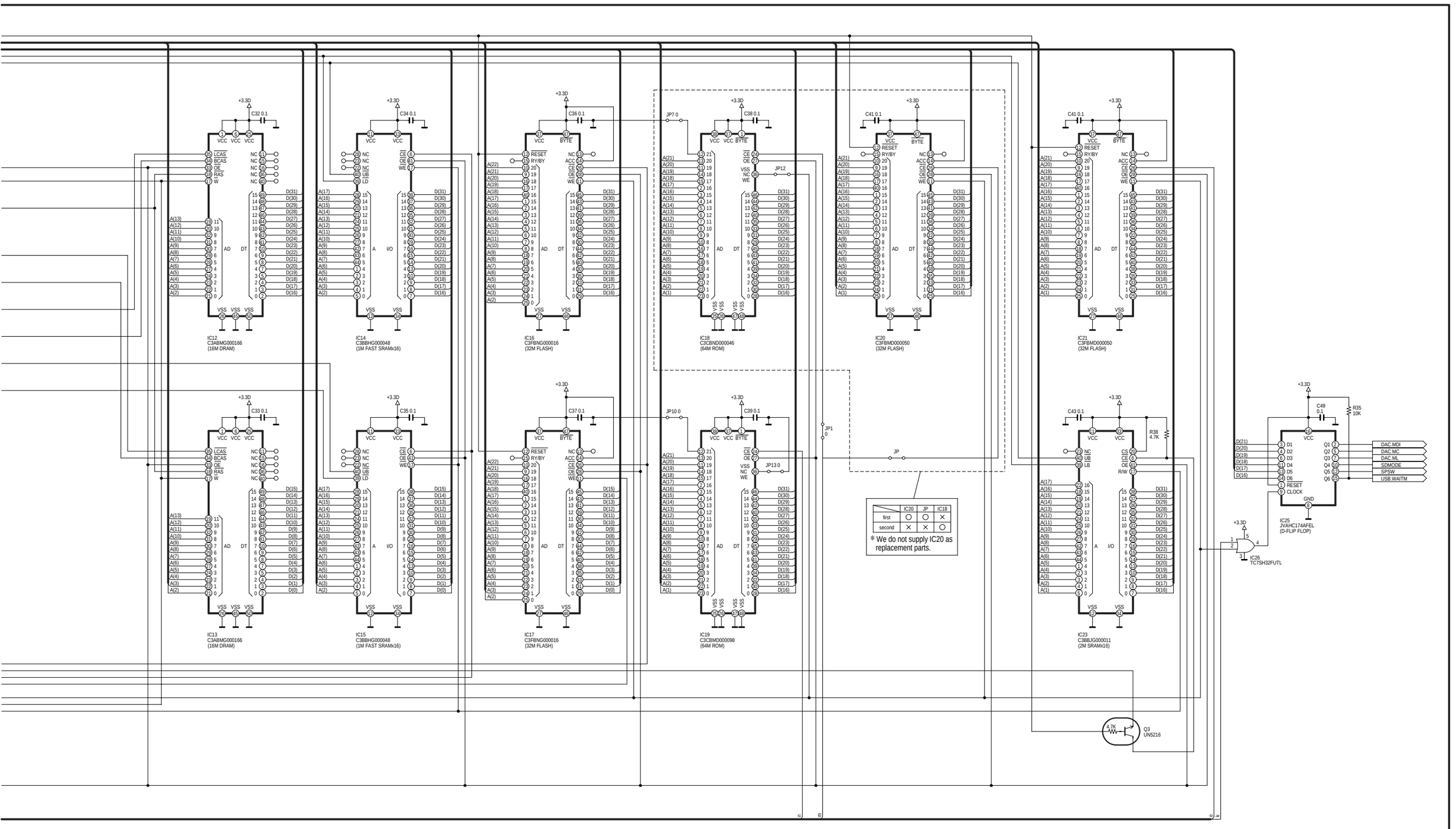

SX-KN7000 MAIN 1/5 SCHEMATIC DIAGRAM (2/2)

SCHEMATIC DIAGRAM-3

A MAIN 2/5 CIRCUIT

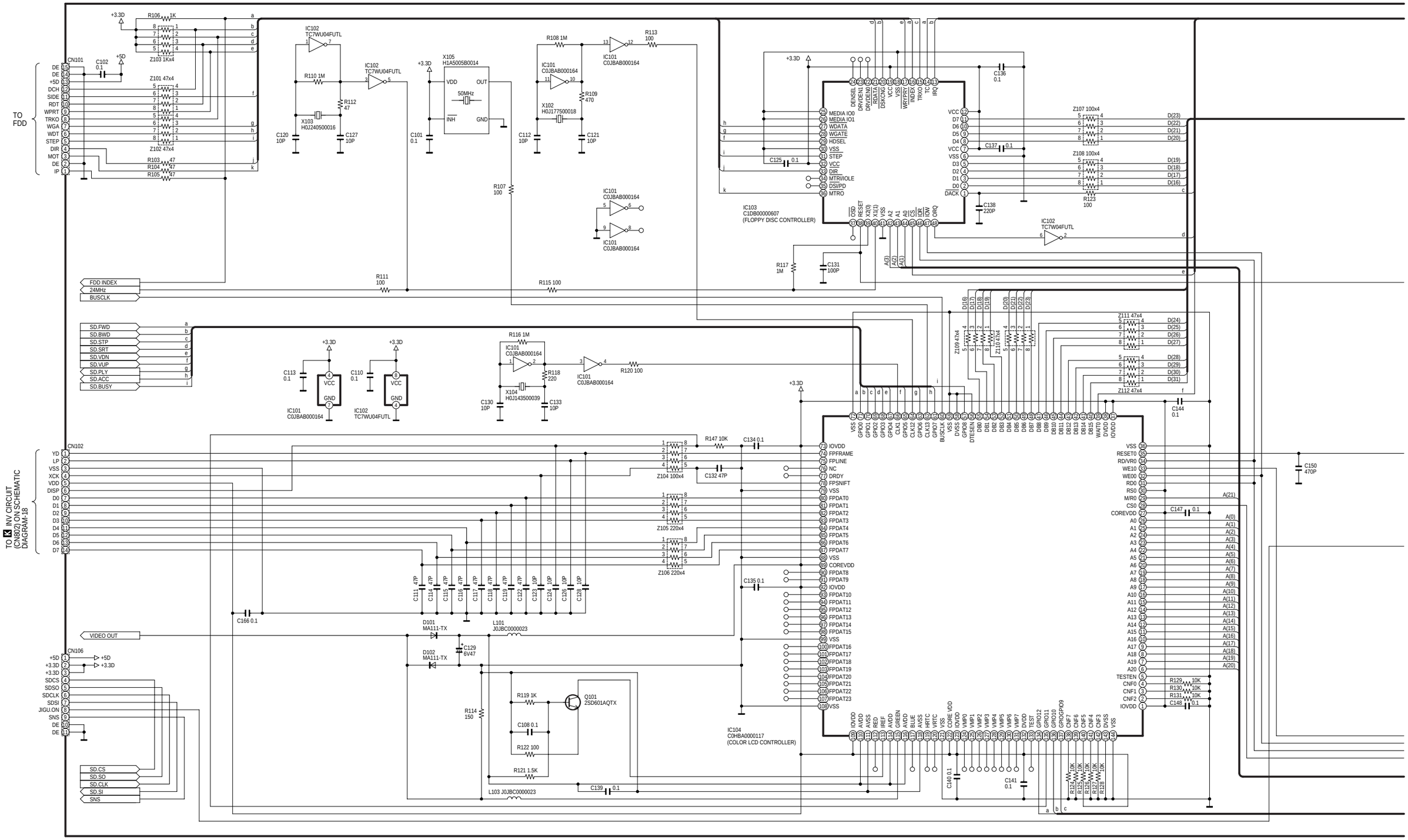

SX-KN7000 MAIN 2/5 SCHEMATIC DIAGRAM (1/2)

SCHEMATIC DIAGRAM-4

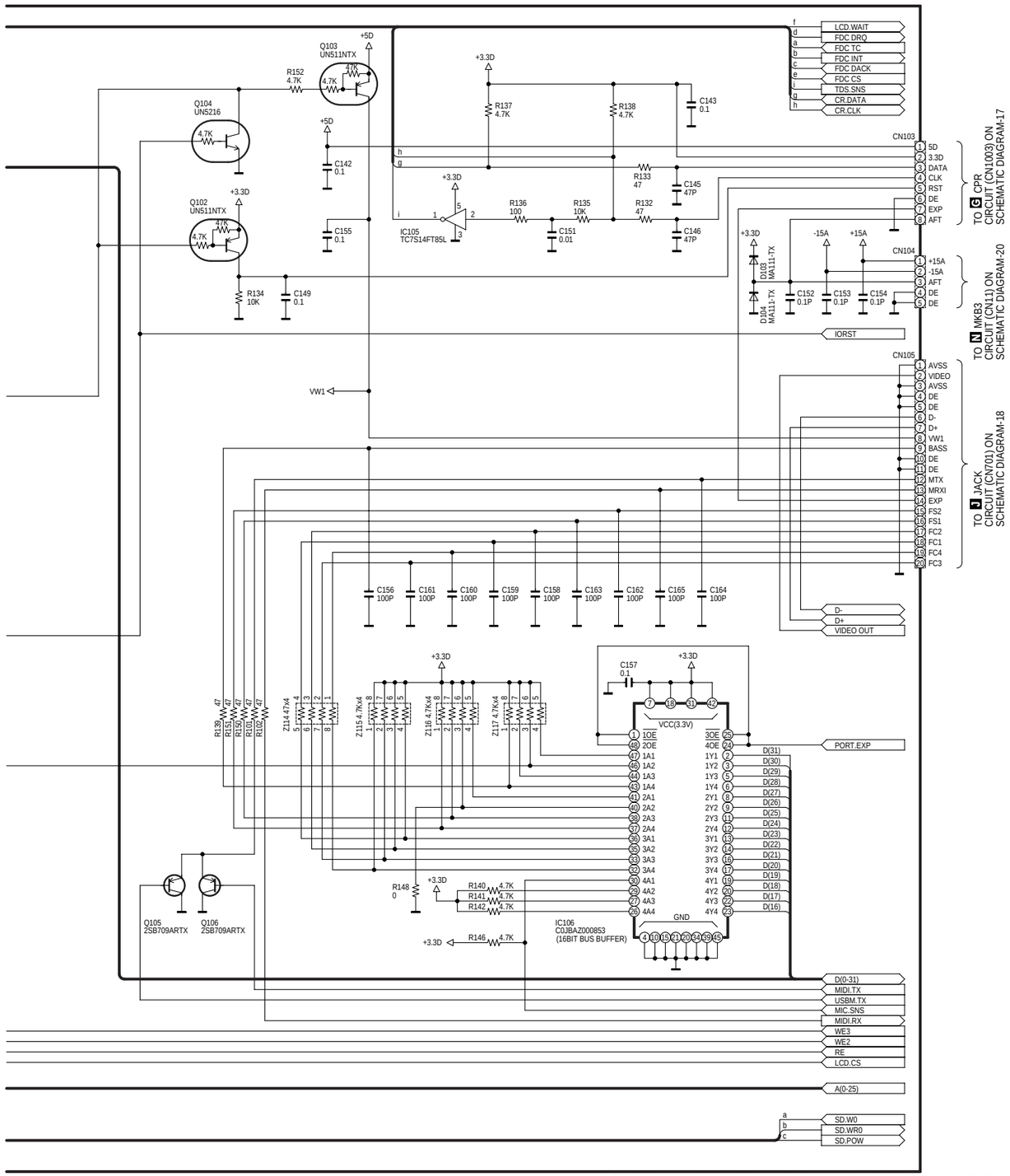

SX-KN7000 MAIN 2/5 SCHEMATIC DIAGRAM (2/2)

SCHEMATIC DIAGRAM-5

A MAIN 3/5 CIRCUIT

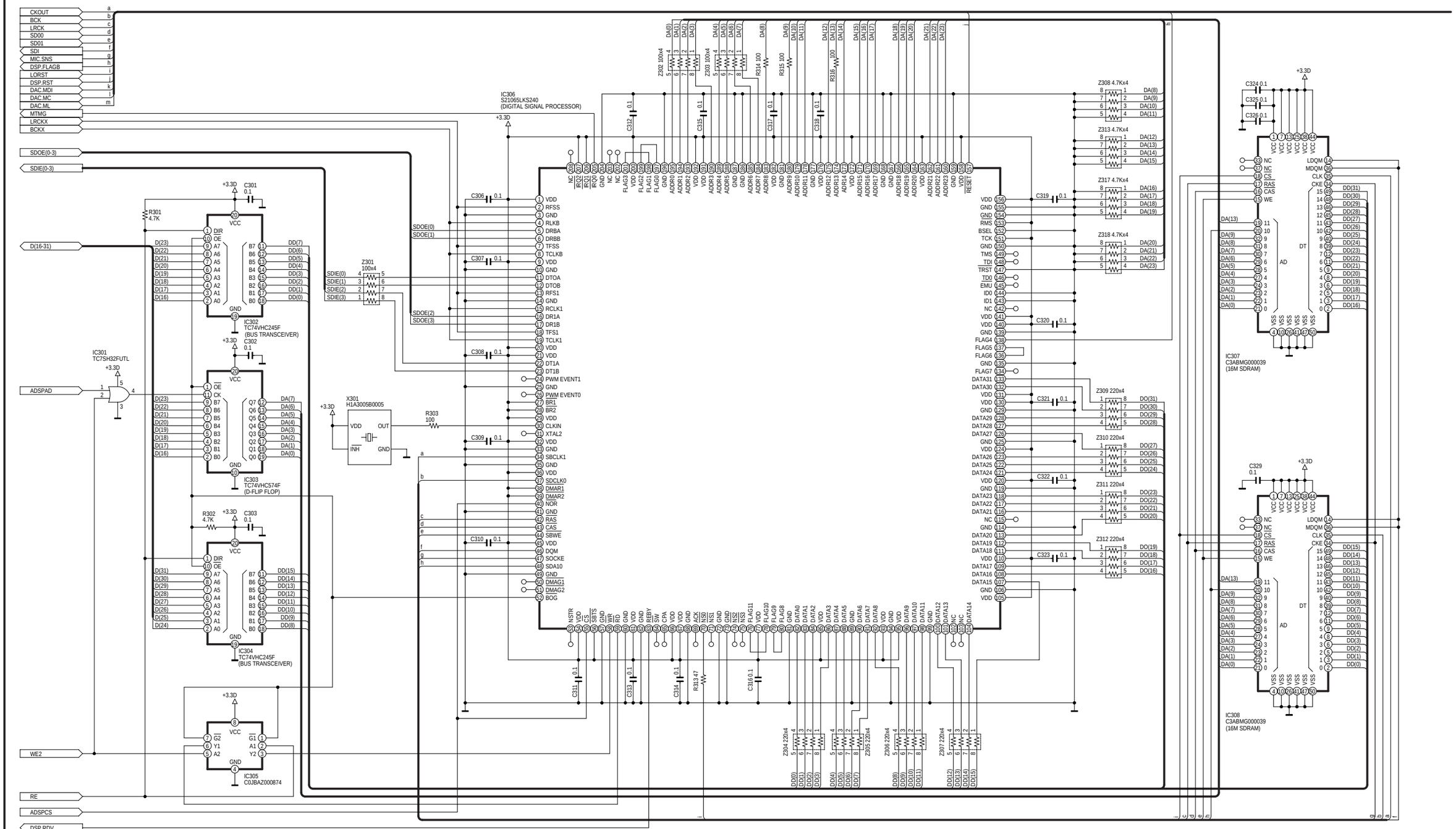

SX-KN7000 MAIN 3/5 SCHEMATIC DIAGRAM (1/2)

SCHEMATIC DIAGRAM-6

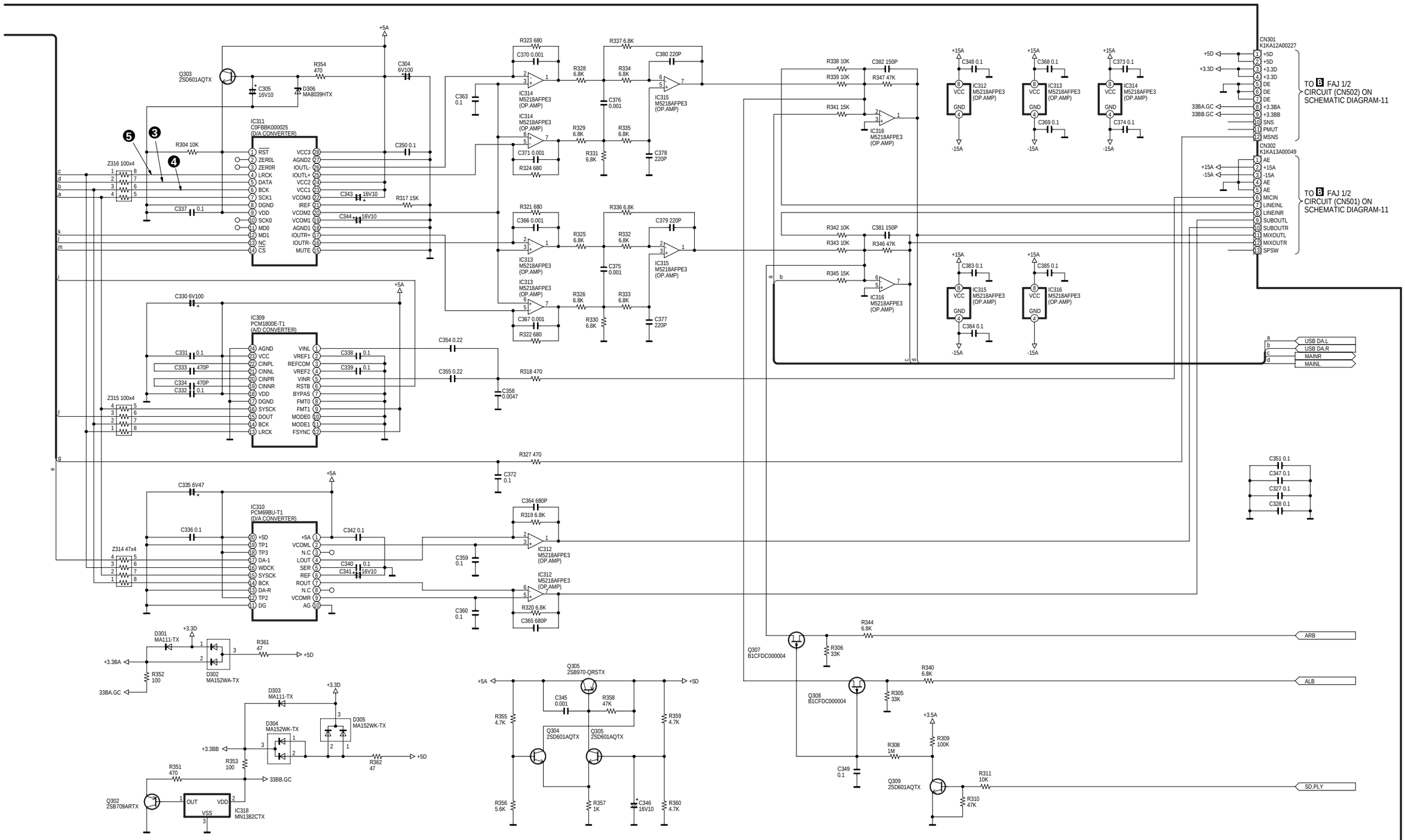

SX-KN7000 MAIN 3/5 SCHEMATIC DIAGRAM (2/2)

SCHEMATIC DIAGRAM-7

A MAIN 4/5 CIRCUIT

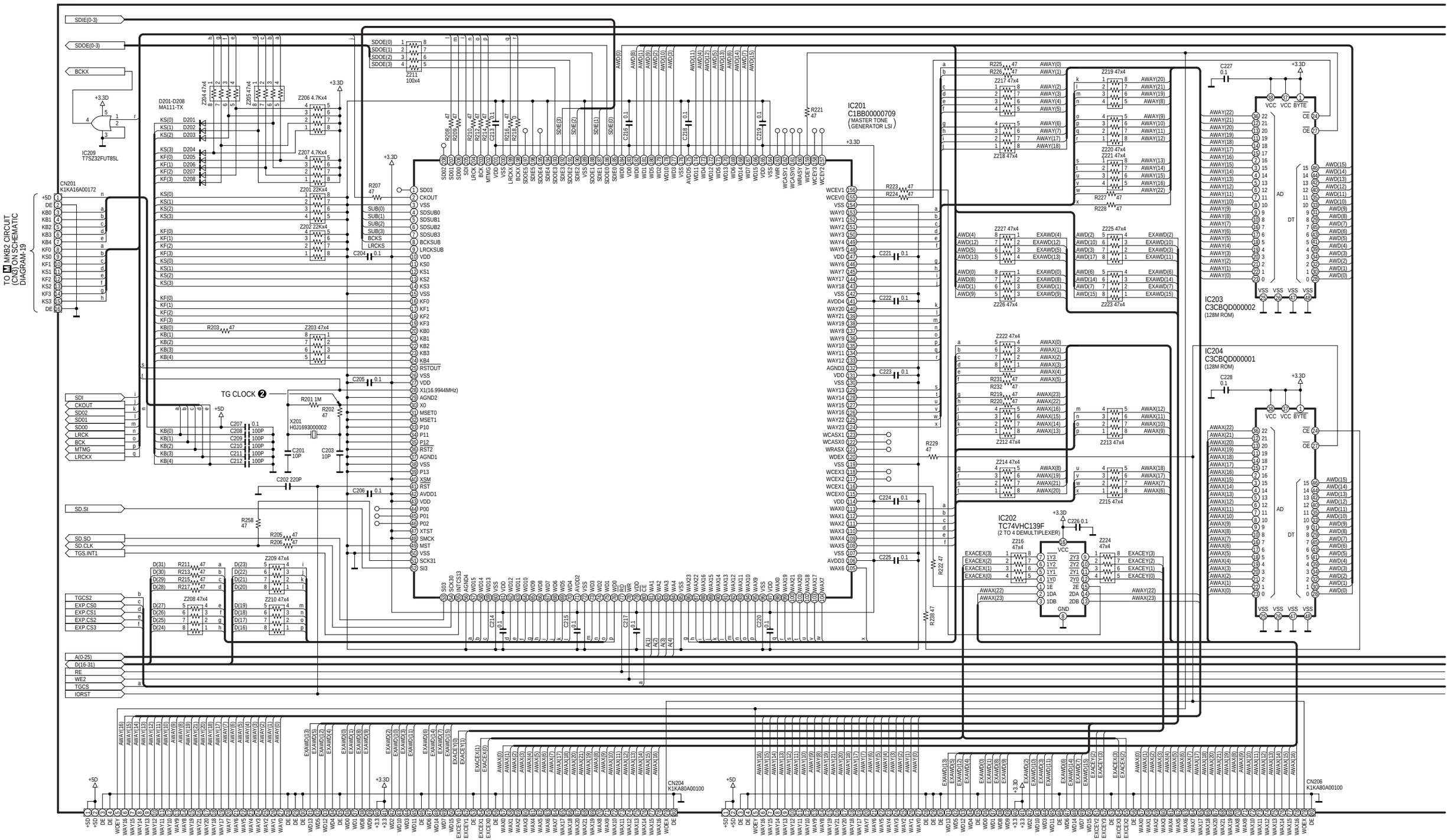

SCHEMATIC DIAGRAM-8

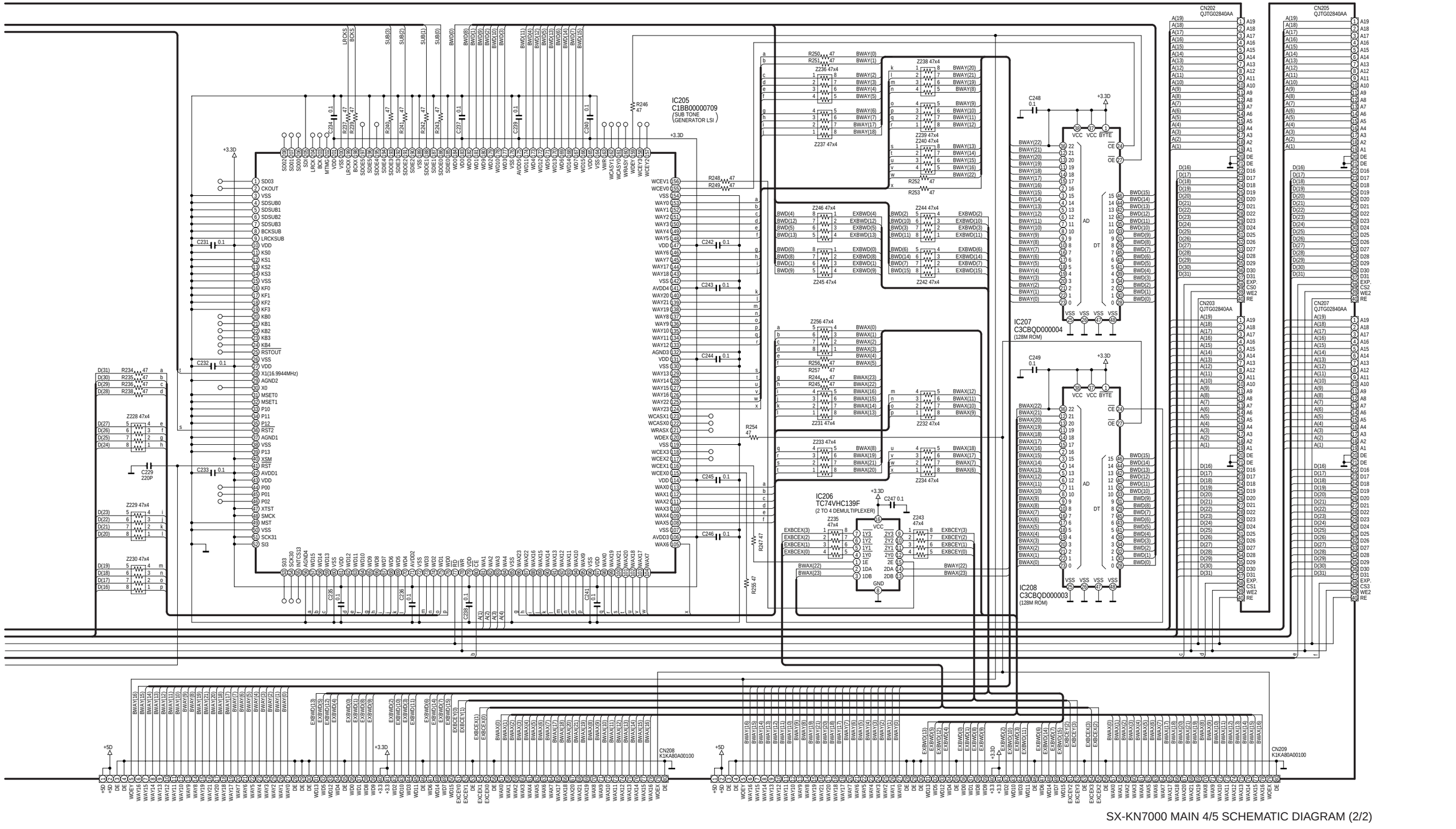

SX-KN7000 MAIN 4/5 SCHEMATIC DIAGRAM (2/2)

SCHEMATIC DIAGRAM-9

A MAIN 5/5 CIRCUIT

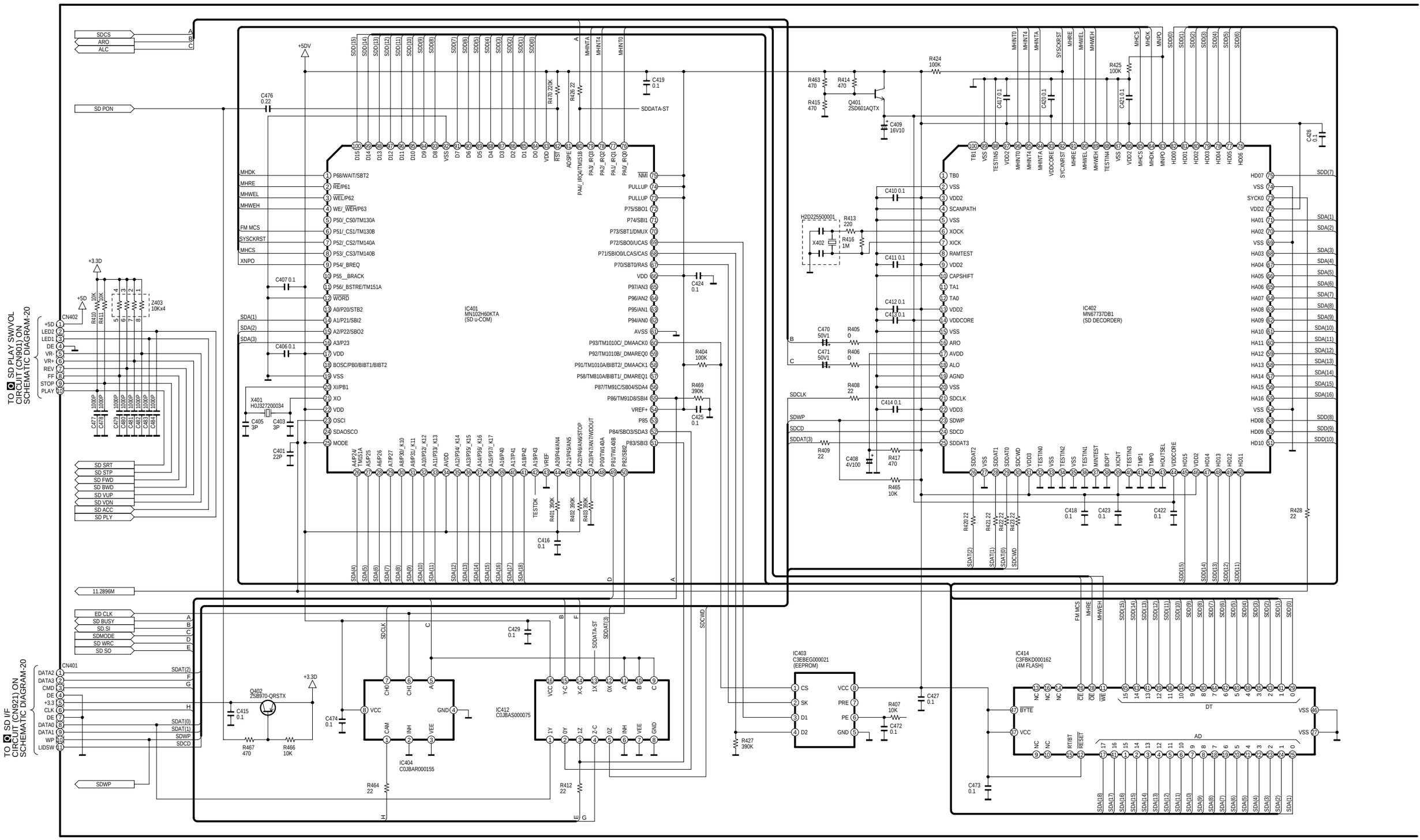

SX-KN7000 MAIN 5/5 SCHEMATIC DIAGRAM (1/2)

SCHEMATIC DIAGRAM-10

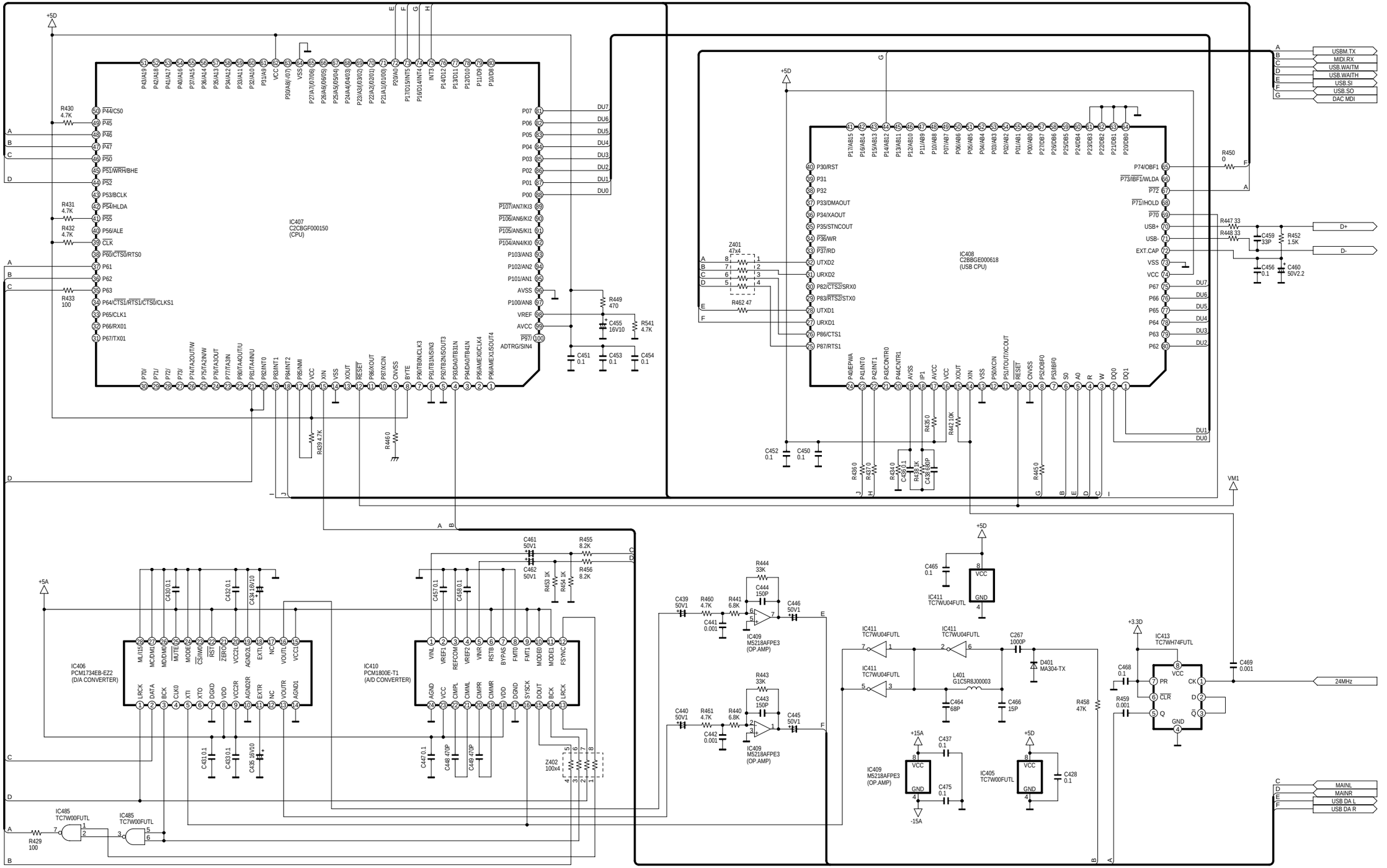

SX-KN7000 MAIN 5/5 SCHEMATIC DIAGRAM (2/2)

SCHEMATIC DIAGRAM-11

B FAJ 1/2 CIRCUIT

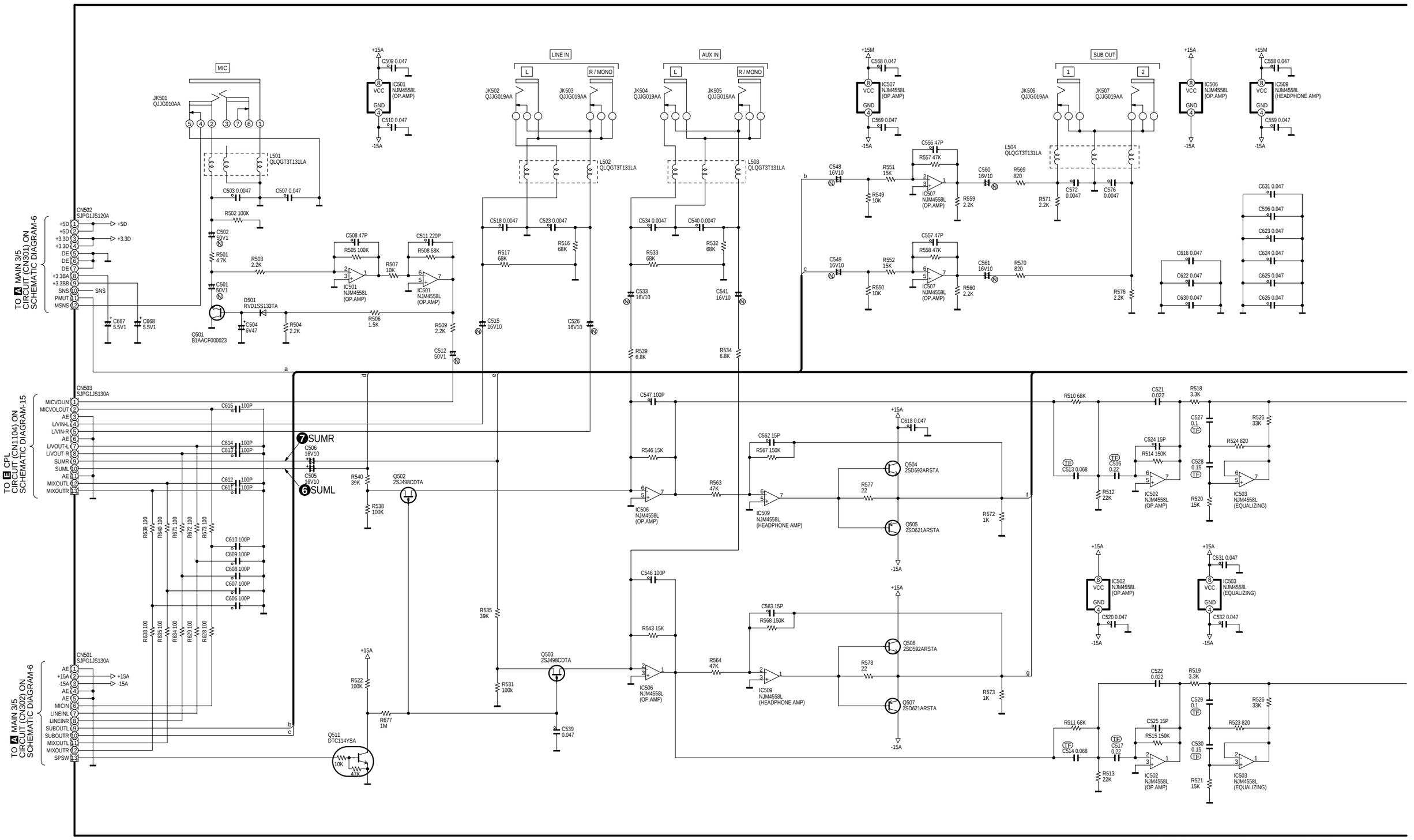

SCHEMATIC DIAGRAM-12

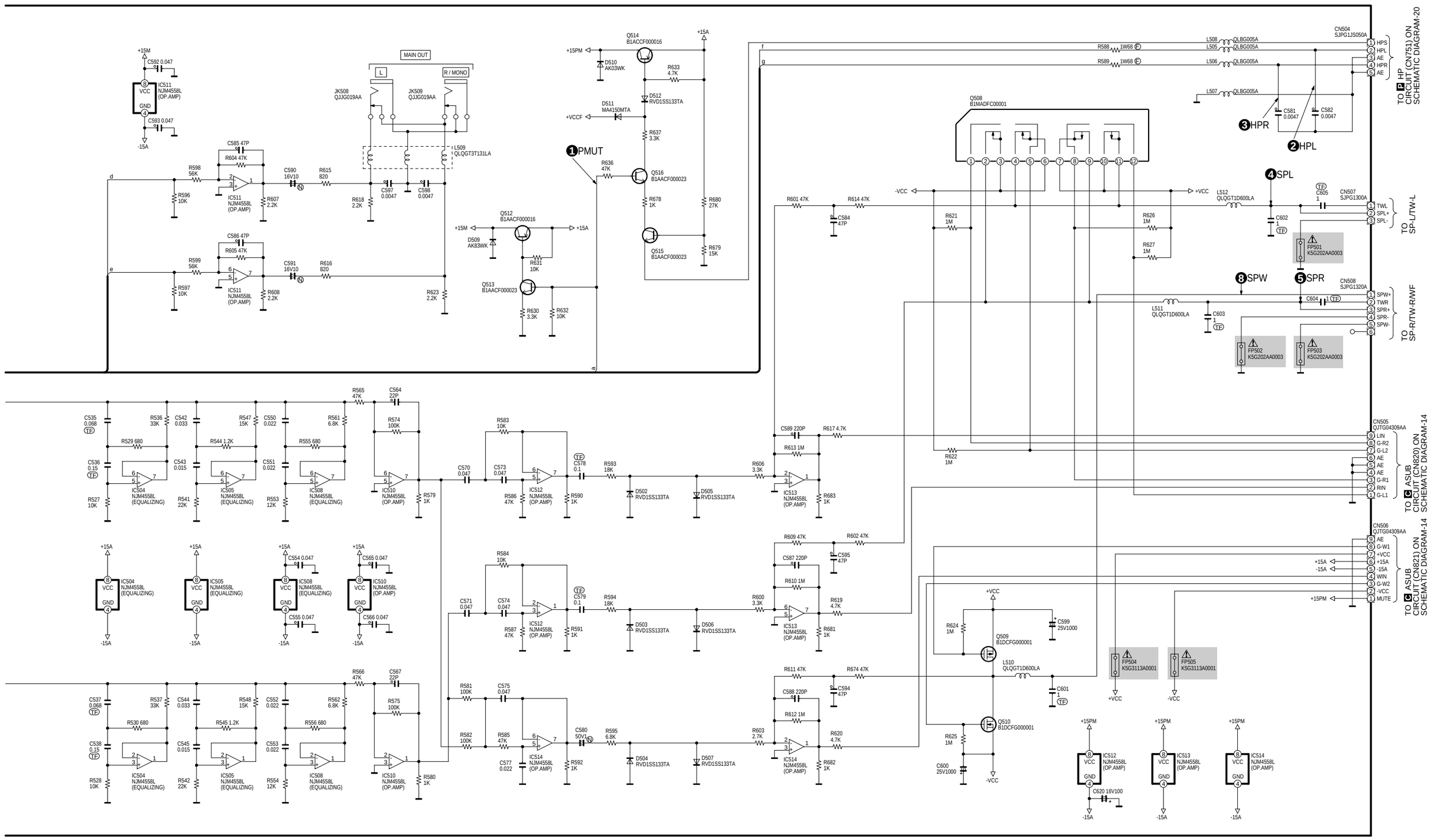

SX-KN7000 FAJ 1/2 SCHEMATIC DIAGRAM (2/2)

SCHEMATIC DIAGRAM-13

J ACP CIRCUIT

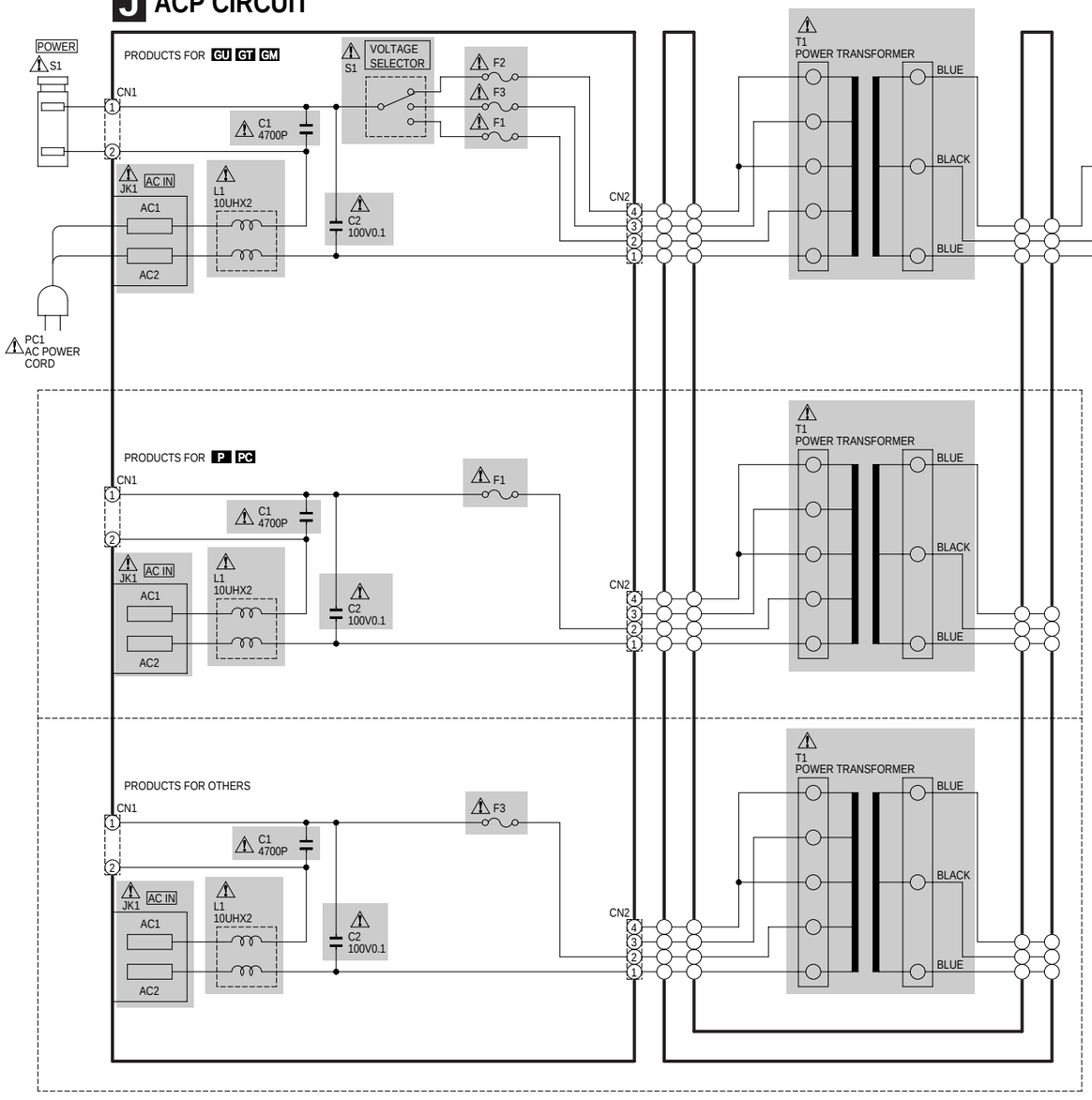

B FAJ 2/2 CIRCUIT

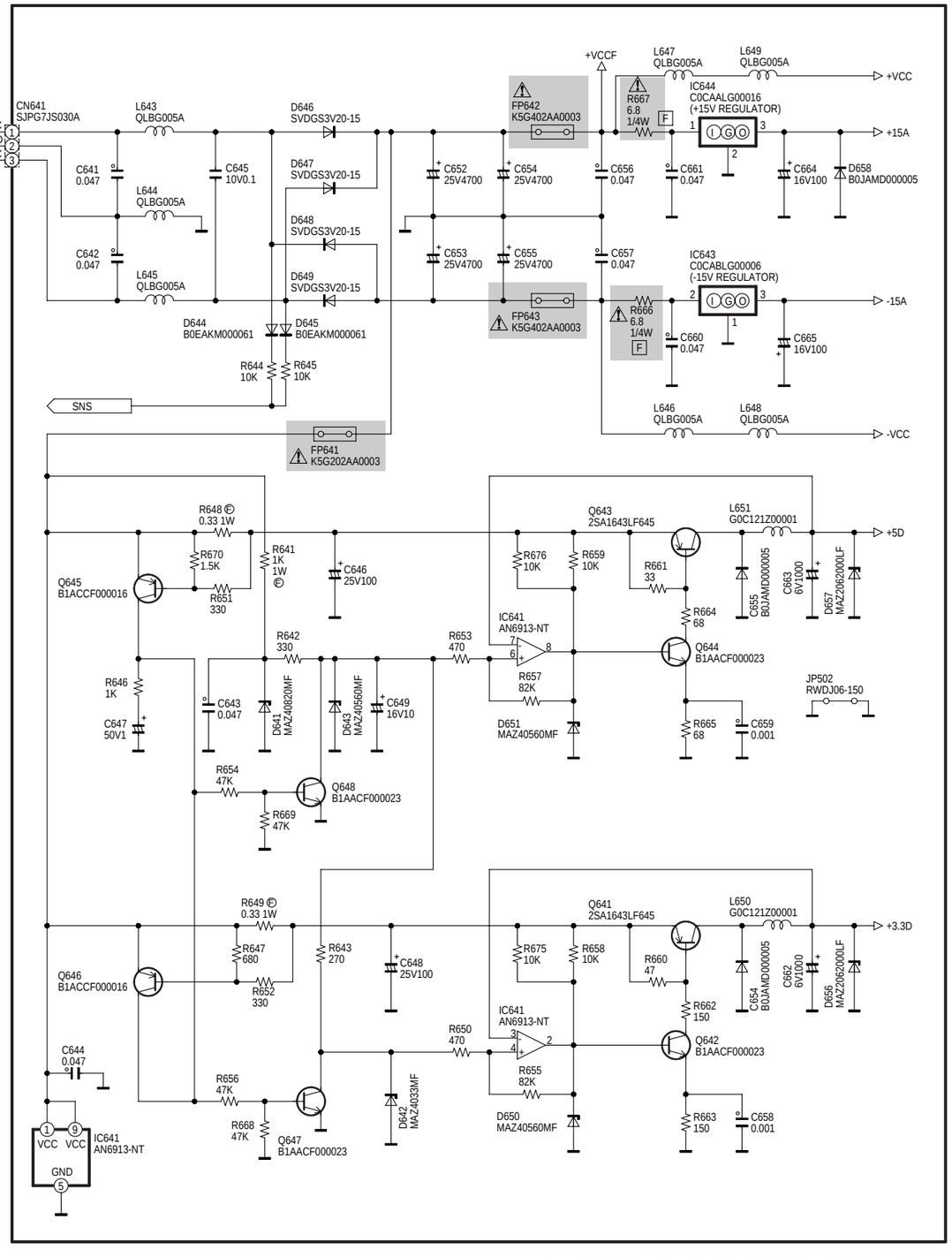

SX-KN7000 ACP / FAJ 2/2 SCHEMATIC DIAGRAM

SCHEMATIC DIAGRAM-14

C ASUB CIRCUIT

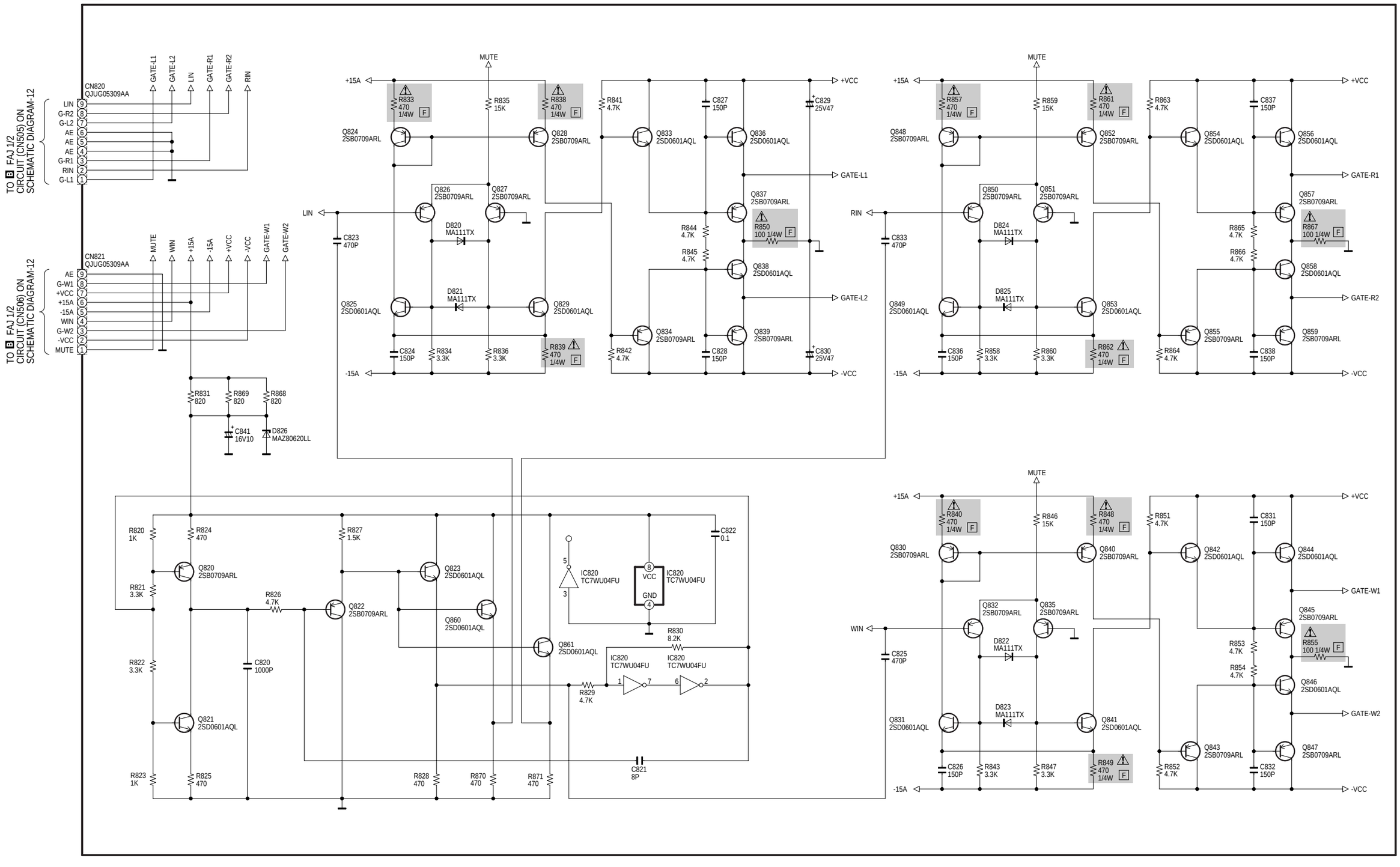

SCHEMATIC DIAGRAM-15

E CPL CIRCUIT

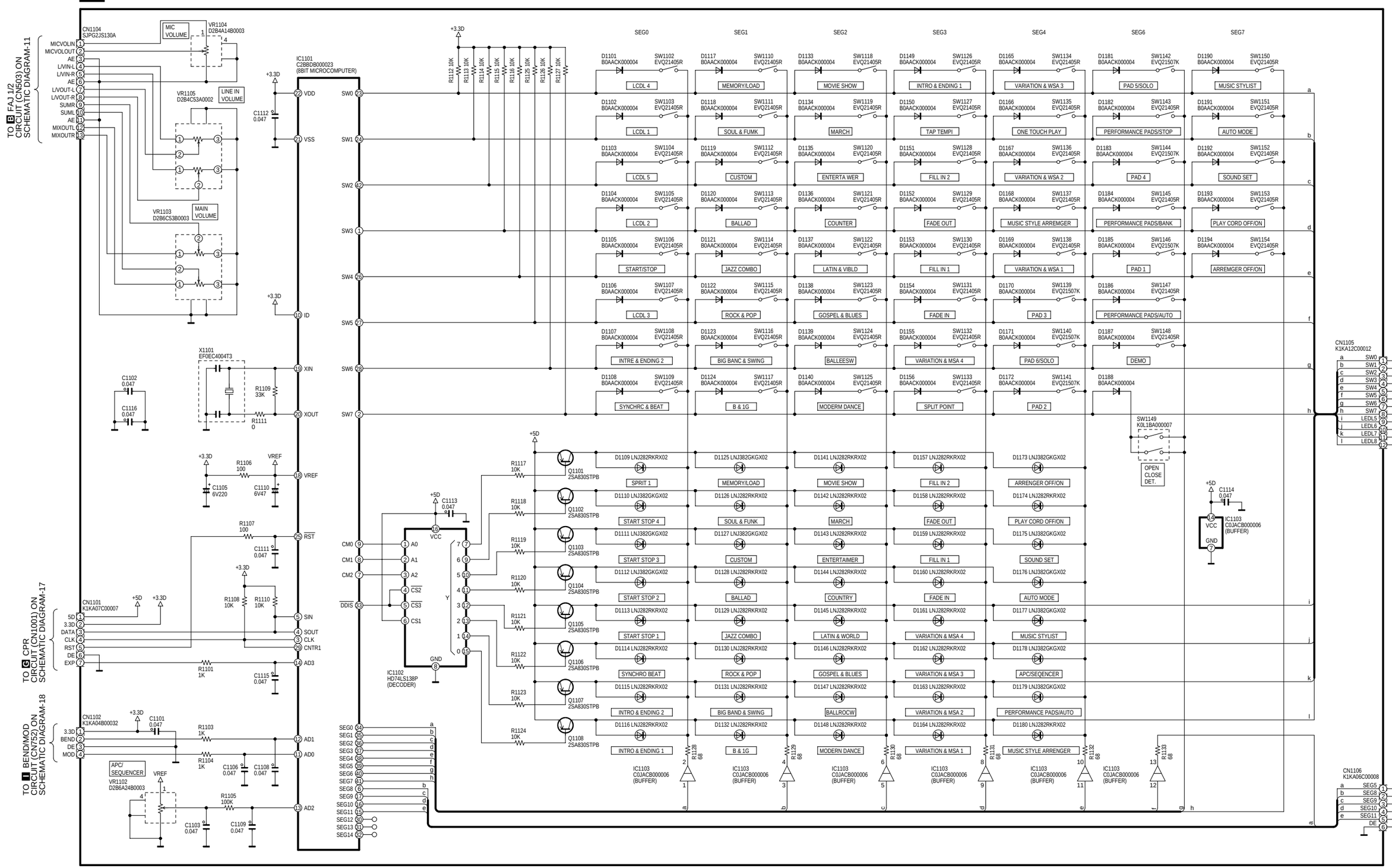

SCHEMATIC DIAGRAM-16

F CPC CIRCUIT

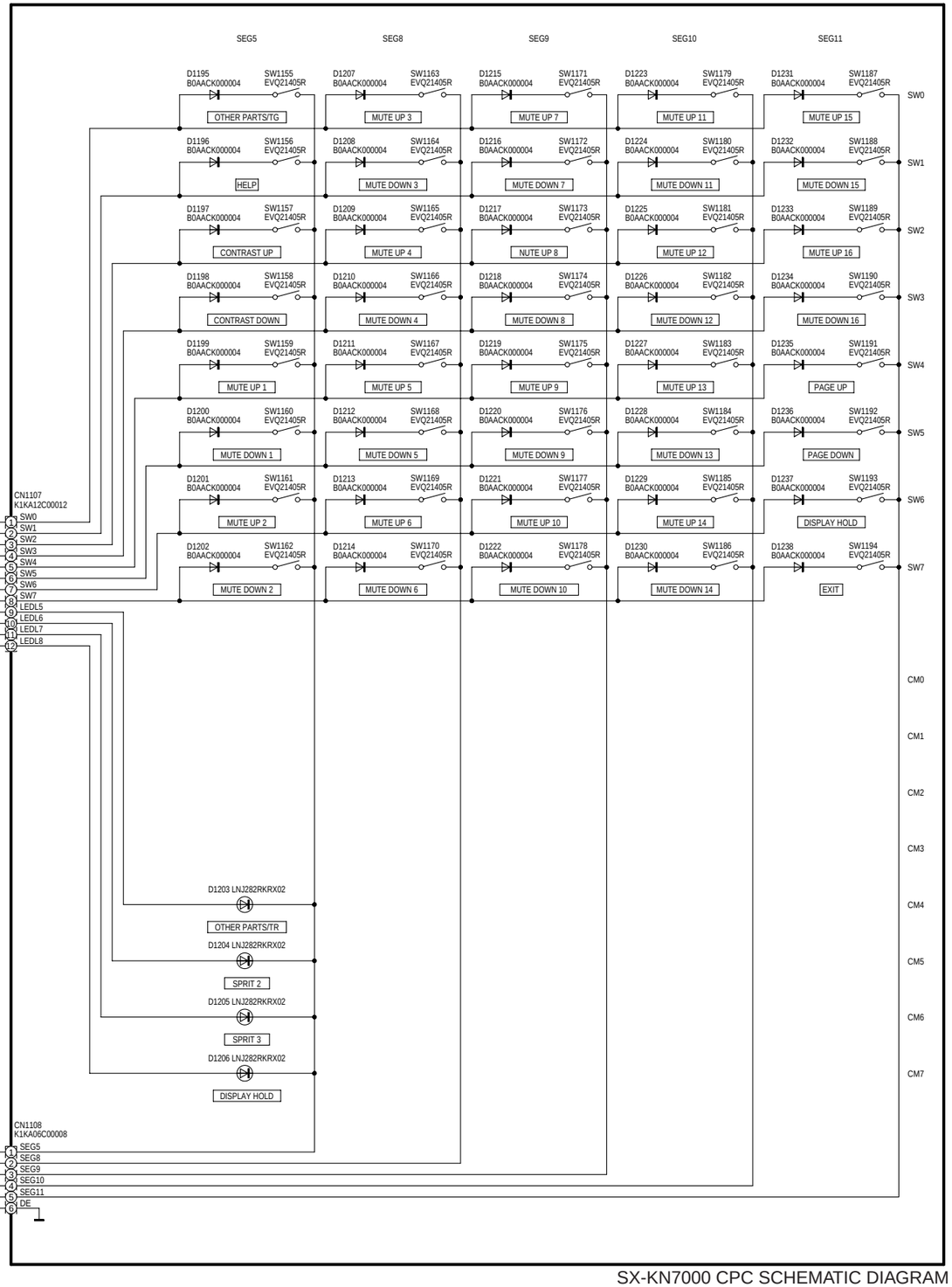

SCHEMATIC DIAGRAM-17

G CPR CIRCUIT

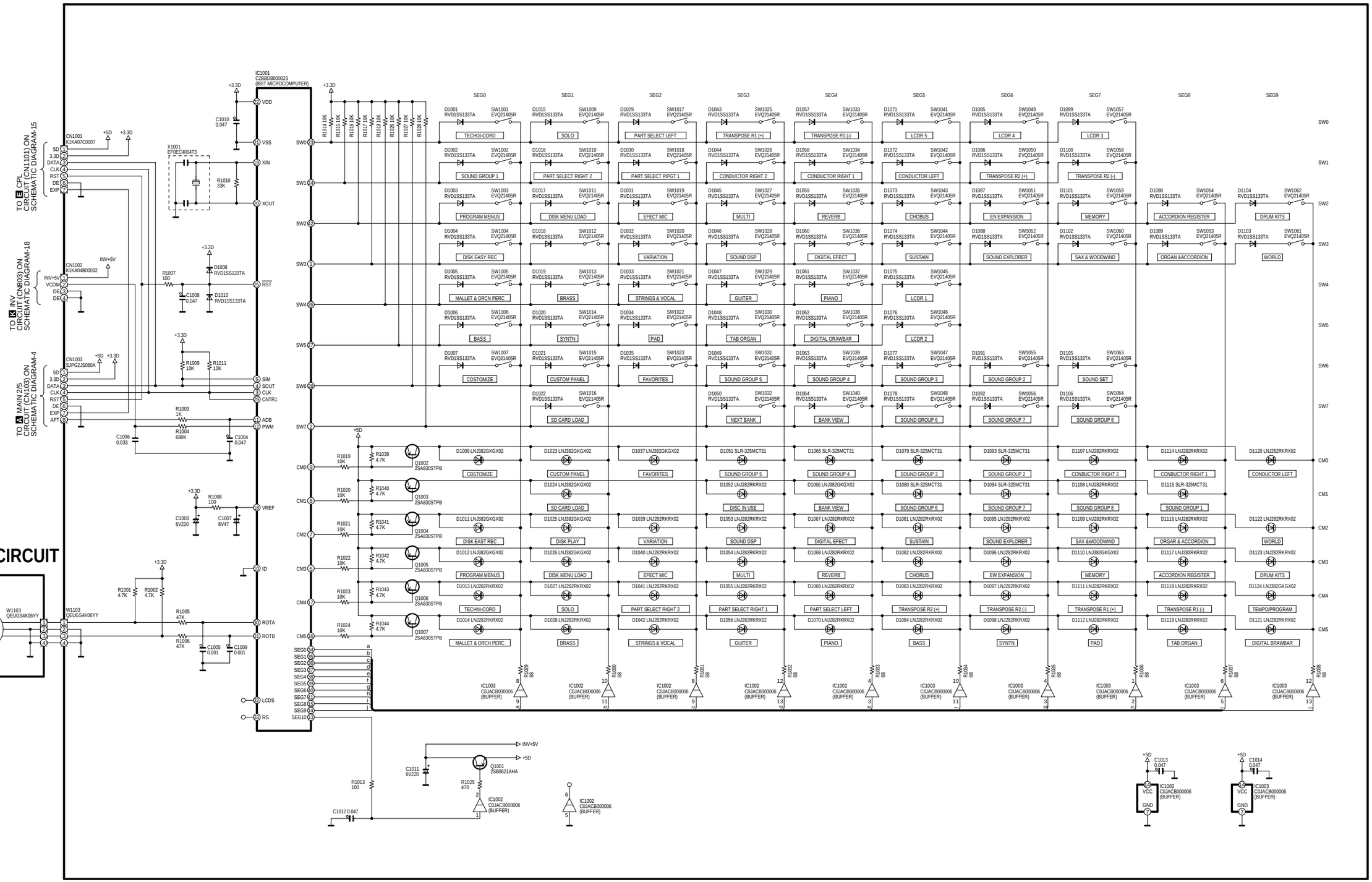

H ROT CIRCUIT

SX-KN7000 CPR / ROT SCHEMATIC DIAGRAM

SCHEMATIC DIAGRAM-18

J JACK CIRCUIT

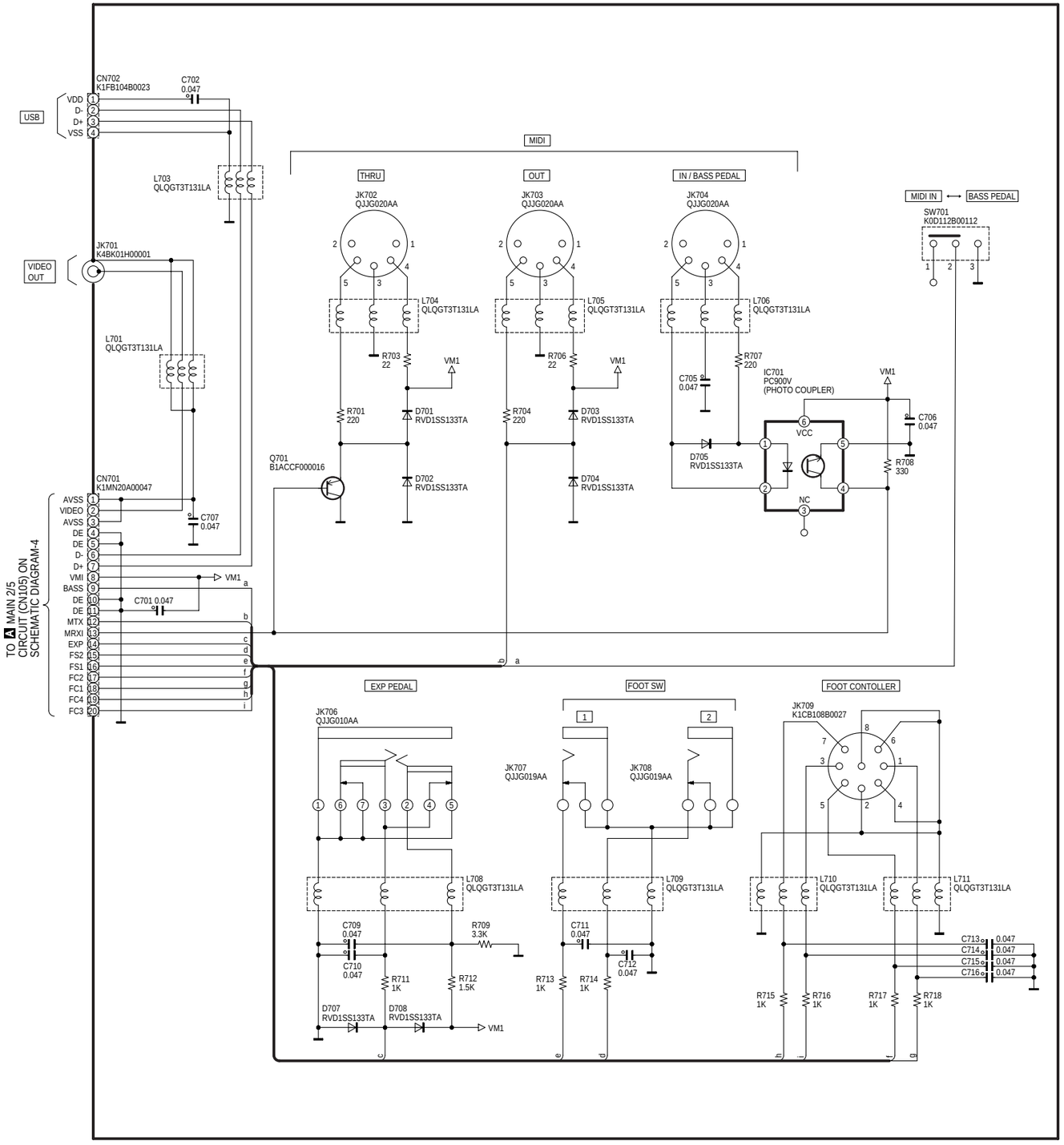

I BEND/MOD CIRCUIT

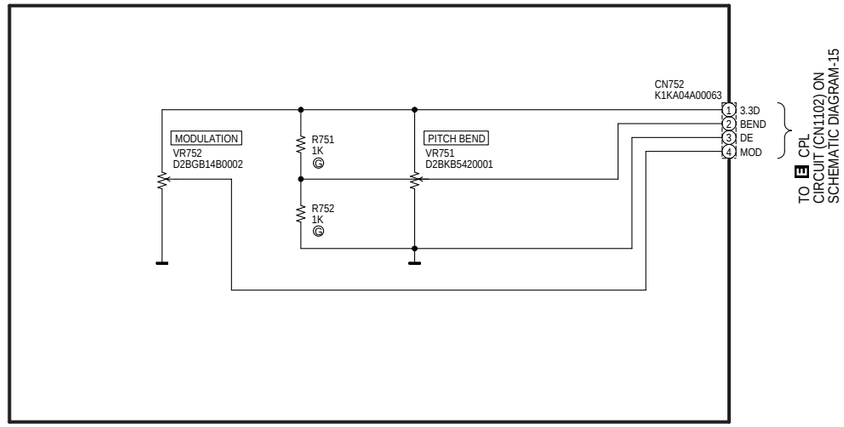

K INV CIRCUIT

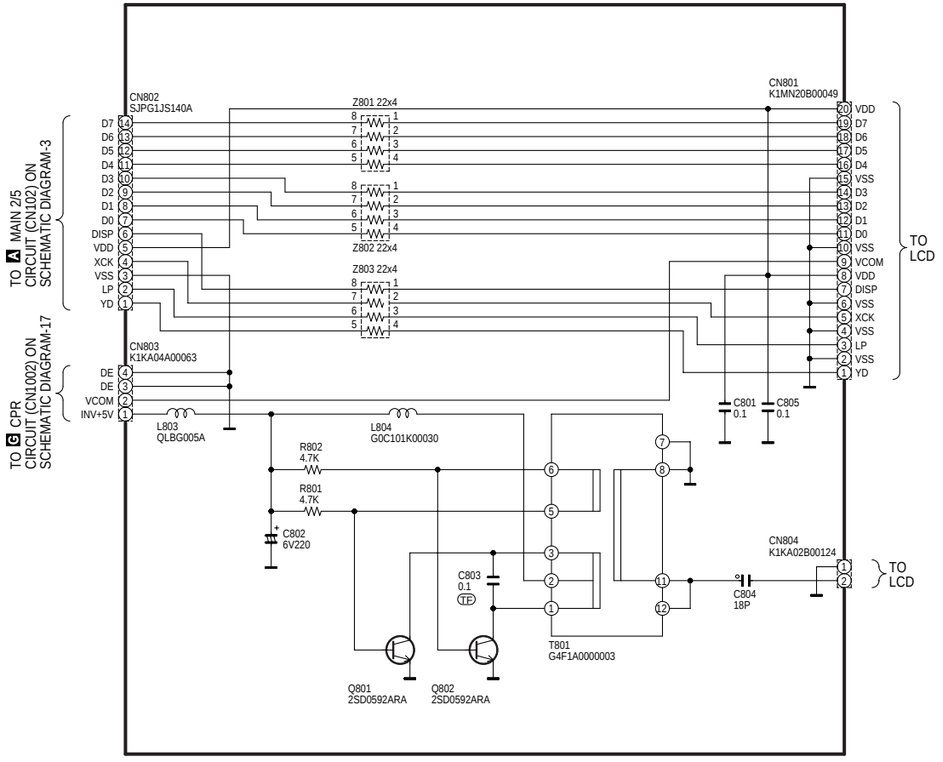

SCHEMATIC DIAGRAM-19

L MKB1 CIRCUIT

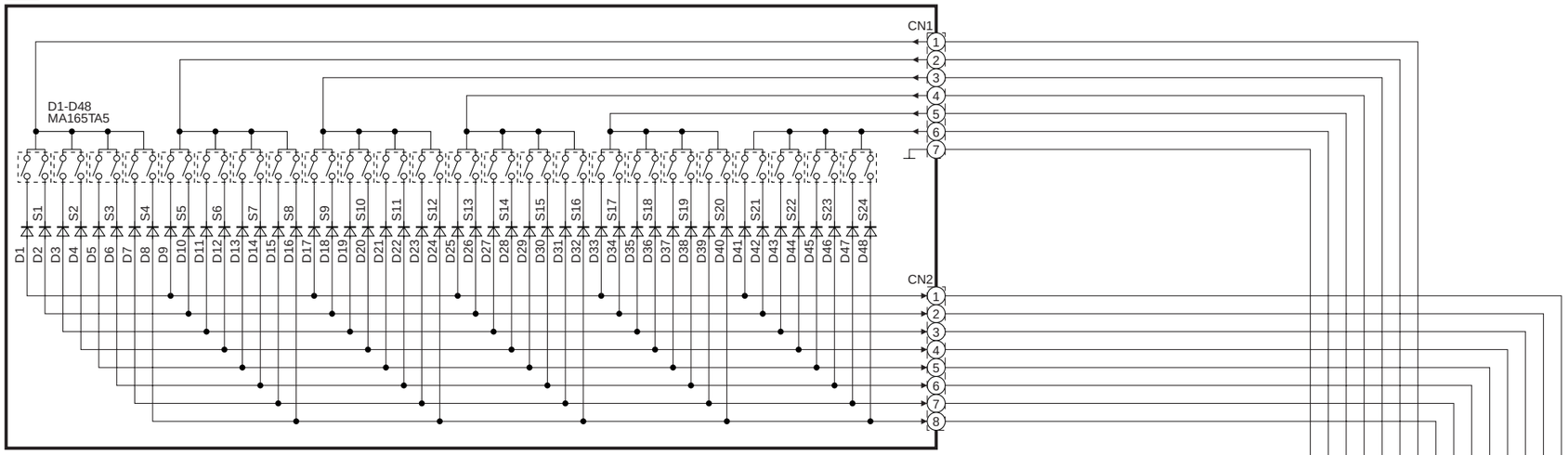

M MKB2 CIRCUIT

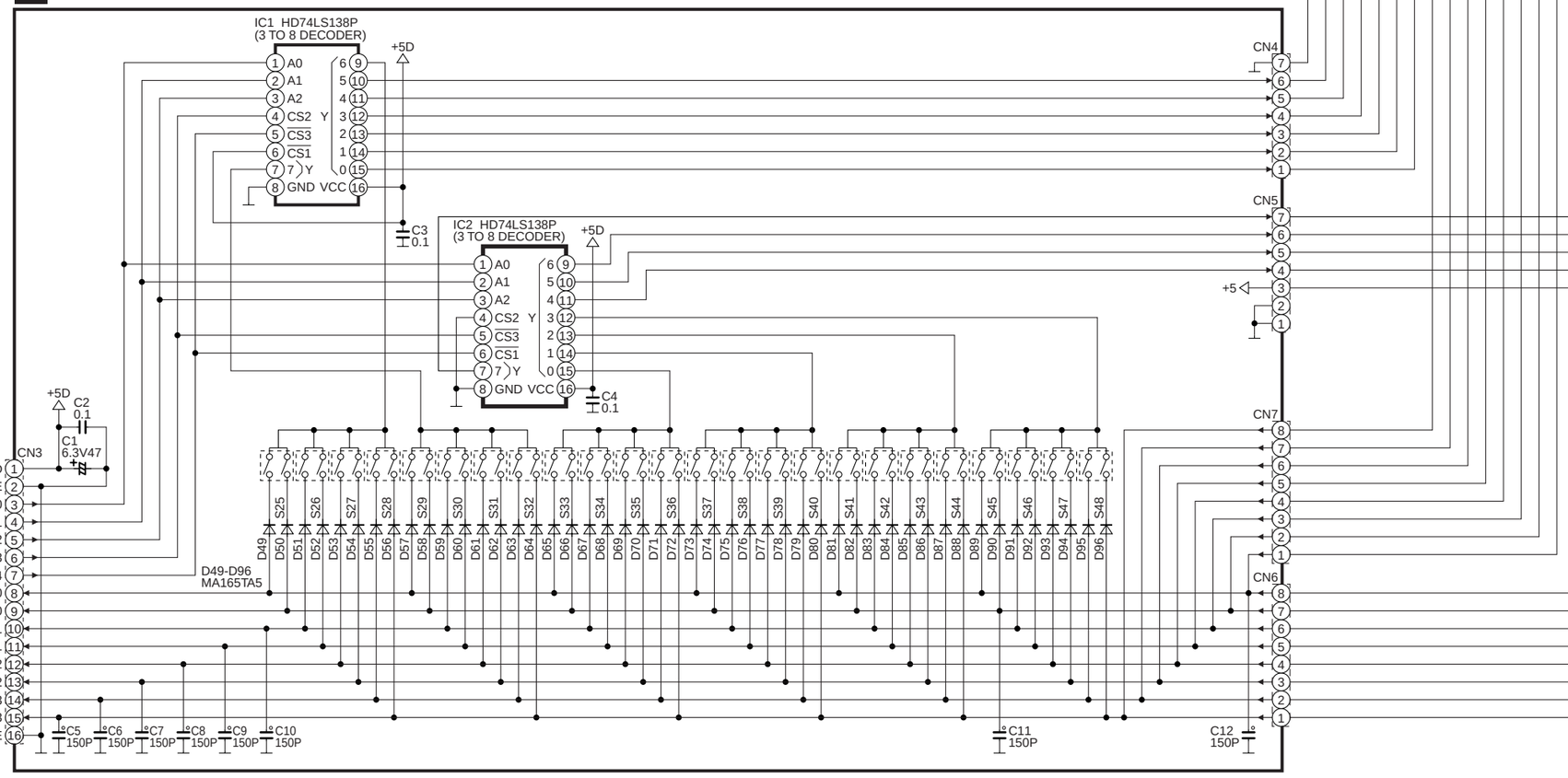

N MKB3 CIRCUIT

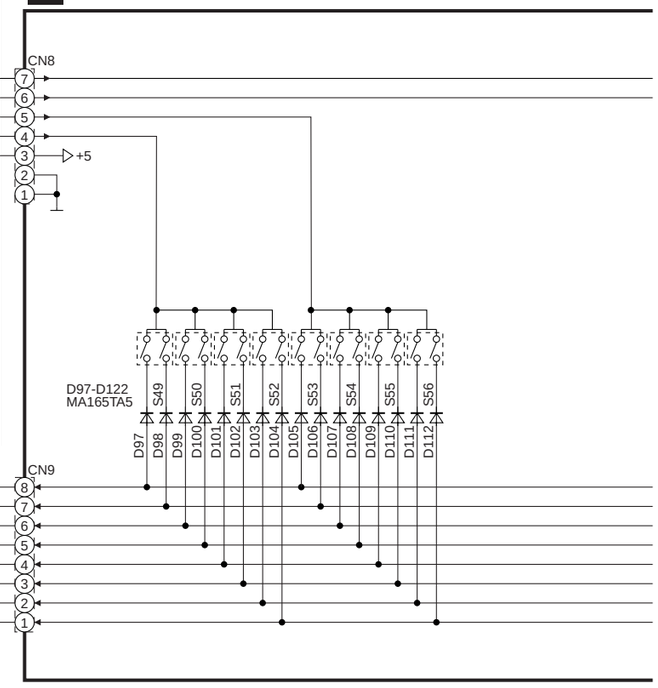

SX-KN7000 MKB1 / MKB2 / MKB3 (1/2) SCHEMATIC DIAGRAM

Q SD I/F CIRCUIT

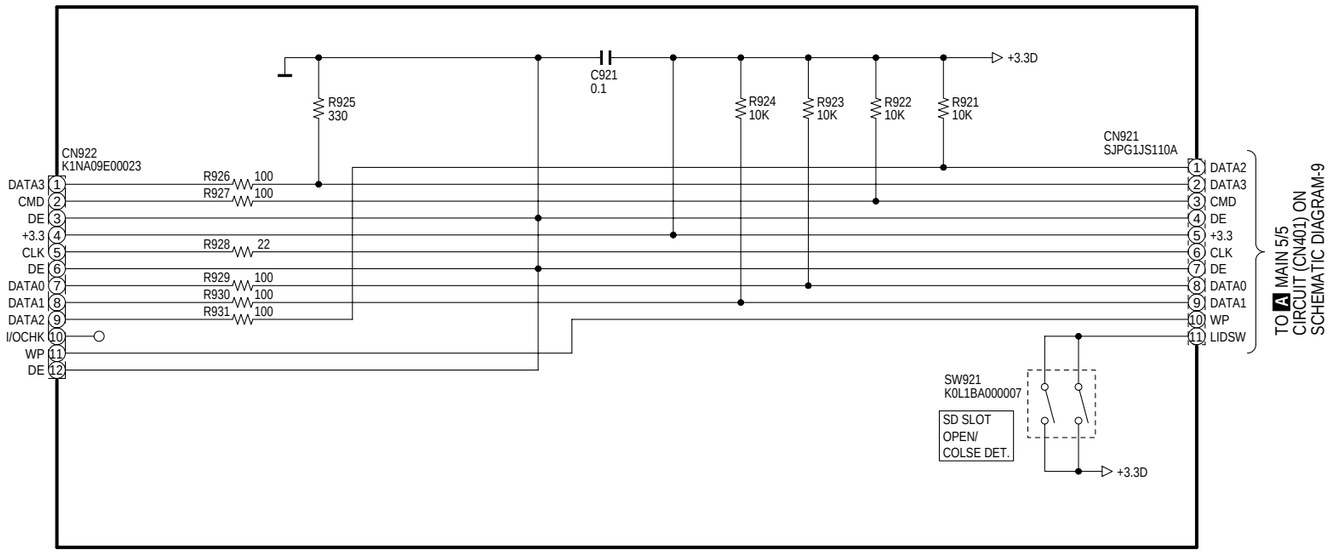

O SD PLAY SW/VOL CIRCUIT

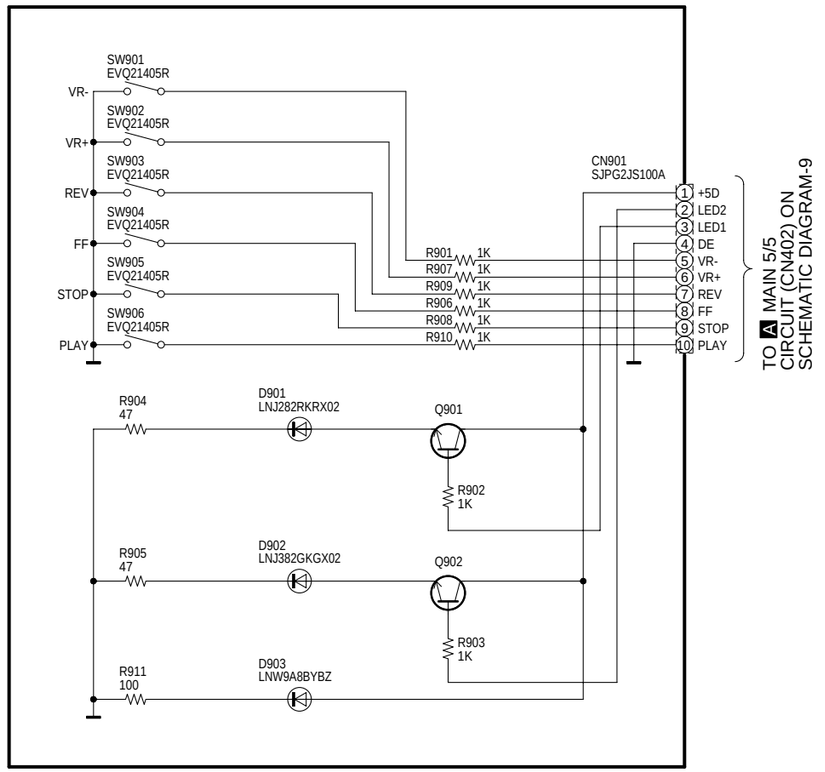

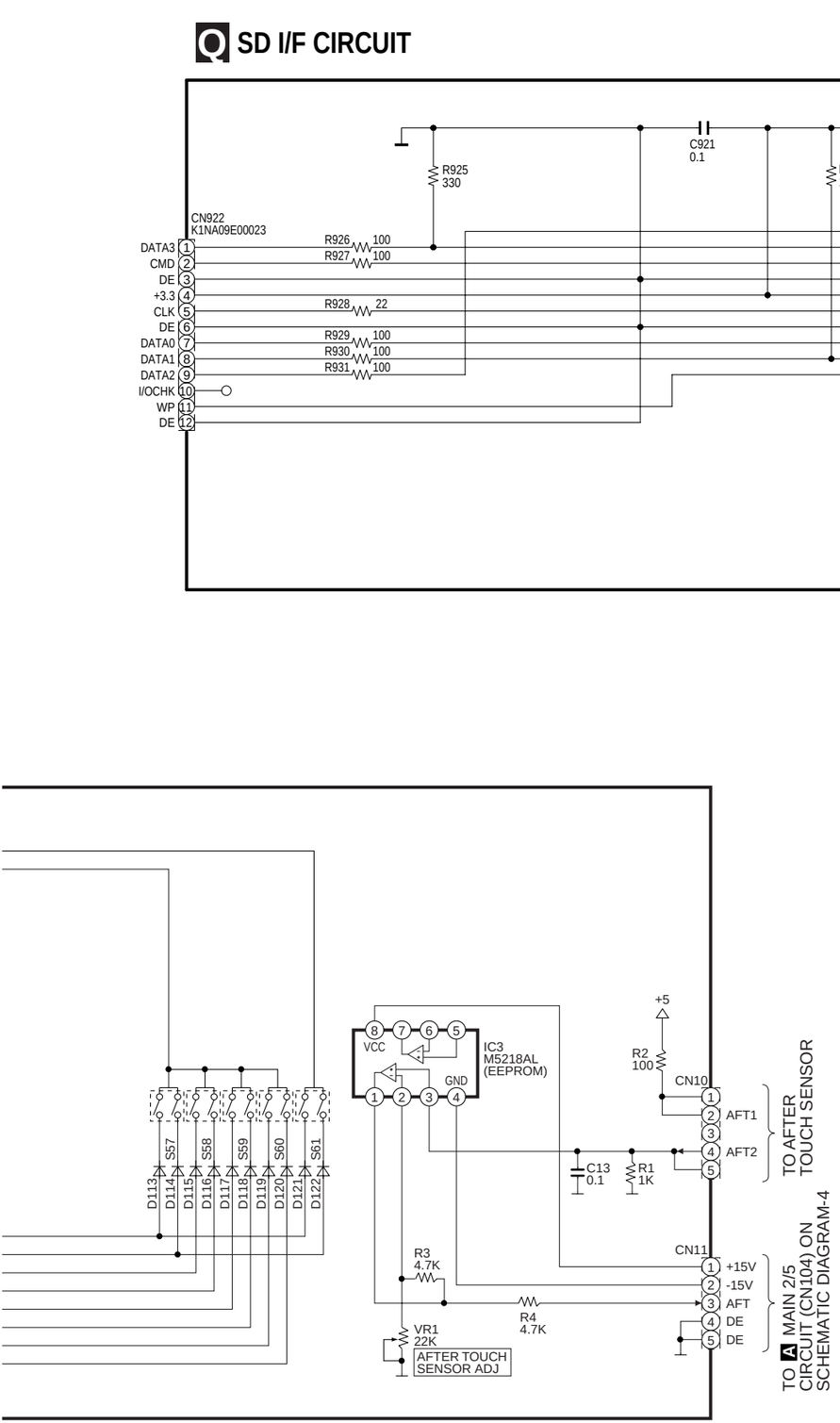

P HP CIRCUIT

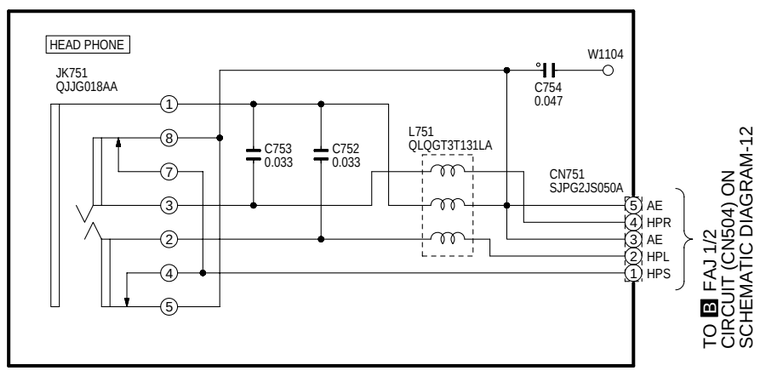

E CPL P.C.B.
LCD
K INV P.C.B.
G CPR P.C.B.
H ROT P.C.B.
CN1102
CN1104
CN1101
CN1106
CN1105
CN801
CN803
CN804
CN802
CN1002
W1103
CN1003
CN1001
W2 QEUGMLW34CZ
W16 QEXGZA04010A
W19 QEXGZA07055A
W20 QEXGZA12015A
W15 QEXGSS14055A
W17 QEXGZA04105A
W18 QEXGSS06010A
W13 QEXGSS08040A
F CPC P.C.B.
CN1108
CN1107
J JACK P.C.B.
CN701
W1 QEUGMLW12C
CN105
W14 QEXGSS13050A
D ACP P.C.B.
CN1
CN2
B FAJ P.C.B.
CN503
CN501
W21 QEXGZA13041A
A MAIN P.C.B.
CN302
CN301
CN502
W7 QEXGSS12050A
C ASUB P.C.B.
CN821
CN820
CN506
CN505
CN641
EW01 OPTION
EW02 OPTION
EW03 OPTION
EW04 OPTION
CN103
CN102
SP-R
TW-R
TRANS
W12 QEXGVH03025B
SP-L
TW-L
W9 QEXGVH03076B
CN507
CN504
CN508
CN201
CN104
CN101
CN401
CN402
W10 QEXGVH06103B
W5 QEXGSS10020A
W11 QEXGZA34050B
W6 QEXGSS11015A
POWER SW
W4 QEXGSS05080A
WF
FDD
Q SD I/F P.C.B.
CN921
O SD PLAY SW/VOL P.C.B.
CN901
W3 QEXGSS05010A
W8 QEXGSS16035A
I BEND/MOD P.C.B.
CN752
P HP P.C.B.
CN751
L MKB1 P.C.B.
M MKB2 P.C.B.
N MKB3 P.C.B.
CN1
CN2
W23 QJTG01007AA
W22 QEUGS8W07BZ
CN4
CN7
CN3
CN5
CN6
W25 QJTG01007AA
W24 QEUGS8W07BZ
CN8
CN9
CN11

SX-KN7000 WIRING CONNECTION DIAGRAM